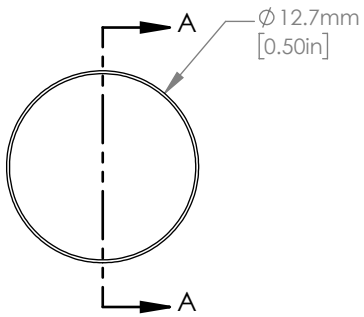

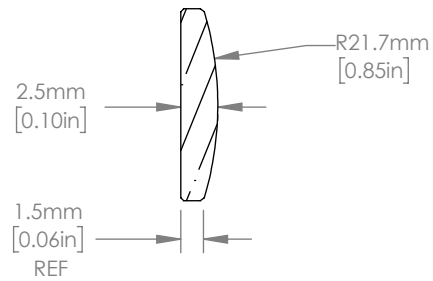

NOTES/SPECIFICATIONS:

1. DESIGN WAVELENGTH: 588nm
2. FOCAL LENGTH: 50.0mm ± 1%
3. BACK FOCAL LENGTH (REF): 48.3mm
4. CLEAR APERTURE: >11.43mm
5. SURFACE QUALTIY: 40-20 SCRATCH-DIG
6. CENTRATION: <3 arcmin
7. DIAMETER TOLERANCE: +0.0/-0.1mm
8. THICKNESS TOLERANCE: ±0.1mm
9. COATING: BBAR Ravg <1.25% FROM 2µm-5µm, 0° AOI ON BOTH OPTICAL SURFACES

FOR INFORMATION ONLY
NOT FOR MANUFACTURING PURPOSES

DRAWING PROJECTION			THORLABS www.thorlabs.com
	NAME	DATE	CaF2 PLANO-CONVEX LENS, Ø 12.7mm, f=50.0mm, BBAR: 2µm-5µm
DRAWN	EMT	20/JAN/14	MATERIAL: VACUUM UV GRADE CALCIUM FLUORIDE — REV B
APPROVAL	MI	08/APR/14	
COPYRIGHT © 2014 BY THORLABS			
VALUES IN PARENTHESIS ARE CALCULATED AND MAY CONTAIN ROUNDOFF ERRORS			ITEM # LA5183-E — APPROX WEIGHT 0.8g