Adjustable Height V-Mount
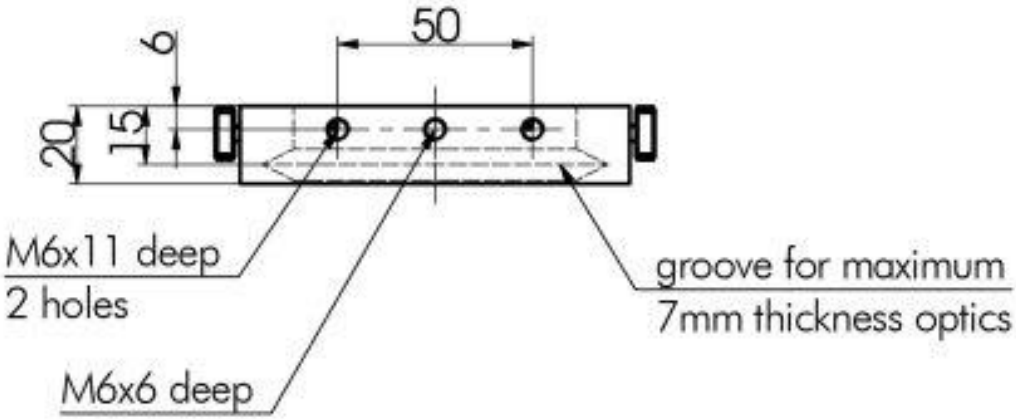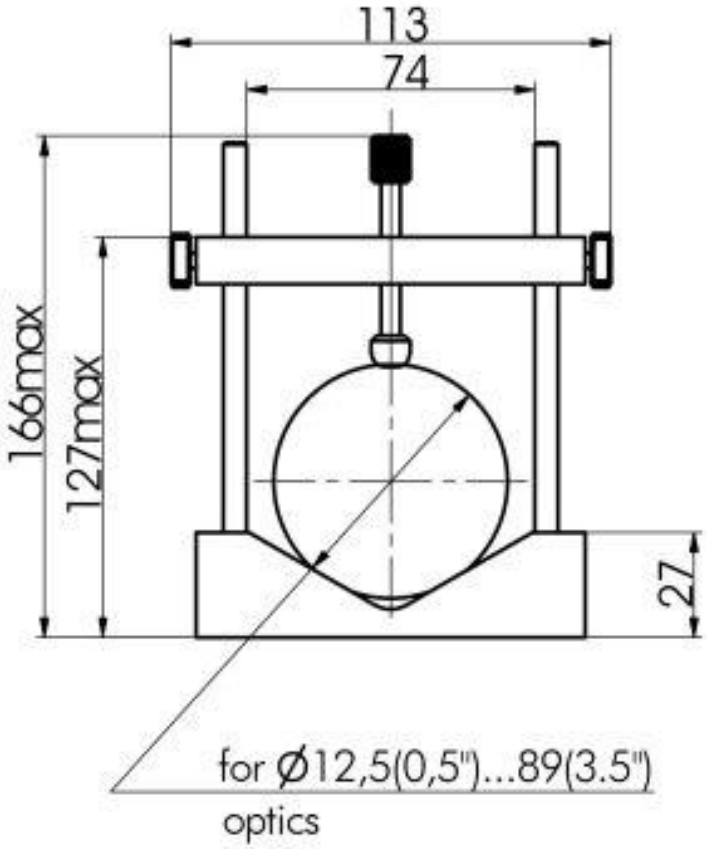
4H89