THORLABS

Collimated Slim Laser Module 780nm, 2.5 mW, Elliptical Beam

CPS780S

Description

The CPS780S has typical center wavelength close to 780 nm and emits a beam that has an elliptical shape. It features an 8 mm diameter housing with a 457 mm (18”) strain relief cable and is compatible with our AD8F mounting adapter and LDS5 power supply.

The CPS Series Compact Laser Diode Modules are engineered to withstand large temperature variations. Each unit is shipped with a test datasheet that includes the measured lasing spectrum.

Because the laser beam is invisible to human eye, extra precautions must be taken to prevent directly or indirectly looking into the laser beam. Direct viewing of laser diode emission may cause eye damage. Extreme care must be taken to prevent the beam from being viewed directly or through external optics or mirrors.

Specifications

General Specifications	
Housing Material	Aluminum
Housing Dimensions	Ø8.0 mm X 30.0 mm
Beam Shape	Elliptical, 3.8 mm X 1.6mm
Operating Temperature	-10 ~ 50 °C
Storage Temperature	-30 ~ 70 °C
Operating Voltage	4.9 V ~ 5.2 V
Laser Safety Rating	3R

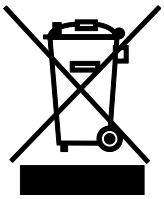

Optical and Electrical Specifications			
	Min	**Typical**	**Max**
Wavelength	775 nm	780 nm	795 nm
Power	2.0 mW	2.5 mW	2.8 mW
Polarization Extinction Ratio	-	25 dB	-
Power Stability (8 hours)	-	-	2%
Power Stability (1 minute)	-	-	1%
Axis Deviation	-	-	10 mrad
Beam Divergence	-	-	1.6 mrad
Operating Current	-	25 mA	50 mA

Performance Plots

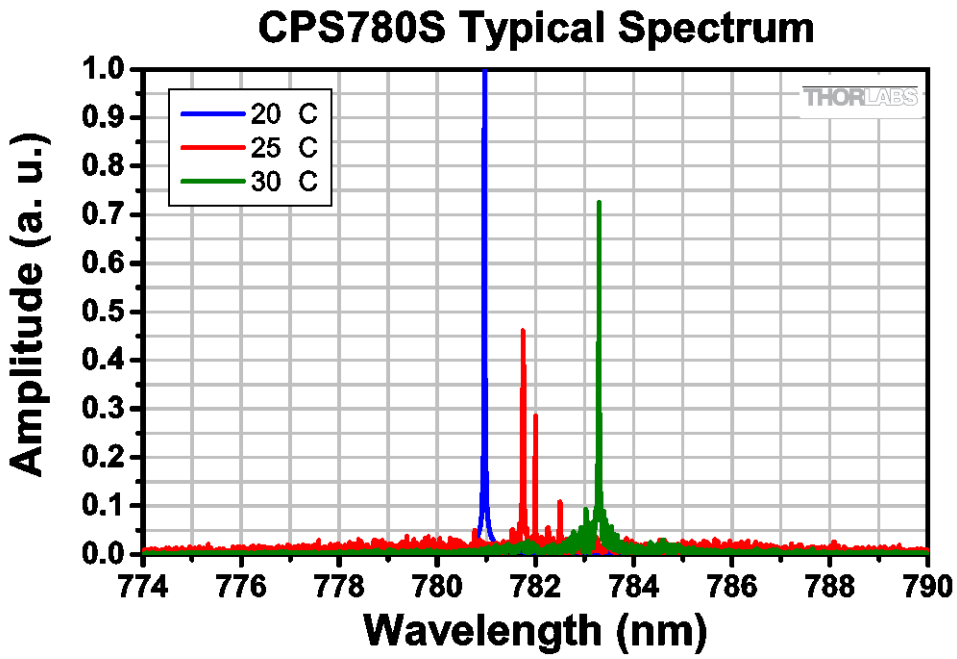

Typical spectrum of the CPS780S Diode Module taken at 20 °C, 25 °C, and 30 °C. The measurement was taken using Thorlabs OSA201 Spectrum Analyzer, which has a resolution of 7.5 GHz (0.25 cm^{-1}). This data is typical and will vary for each module.
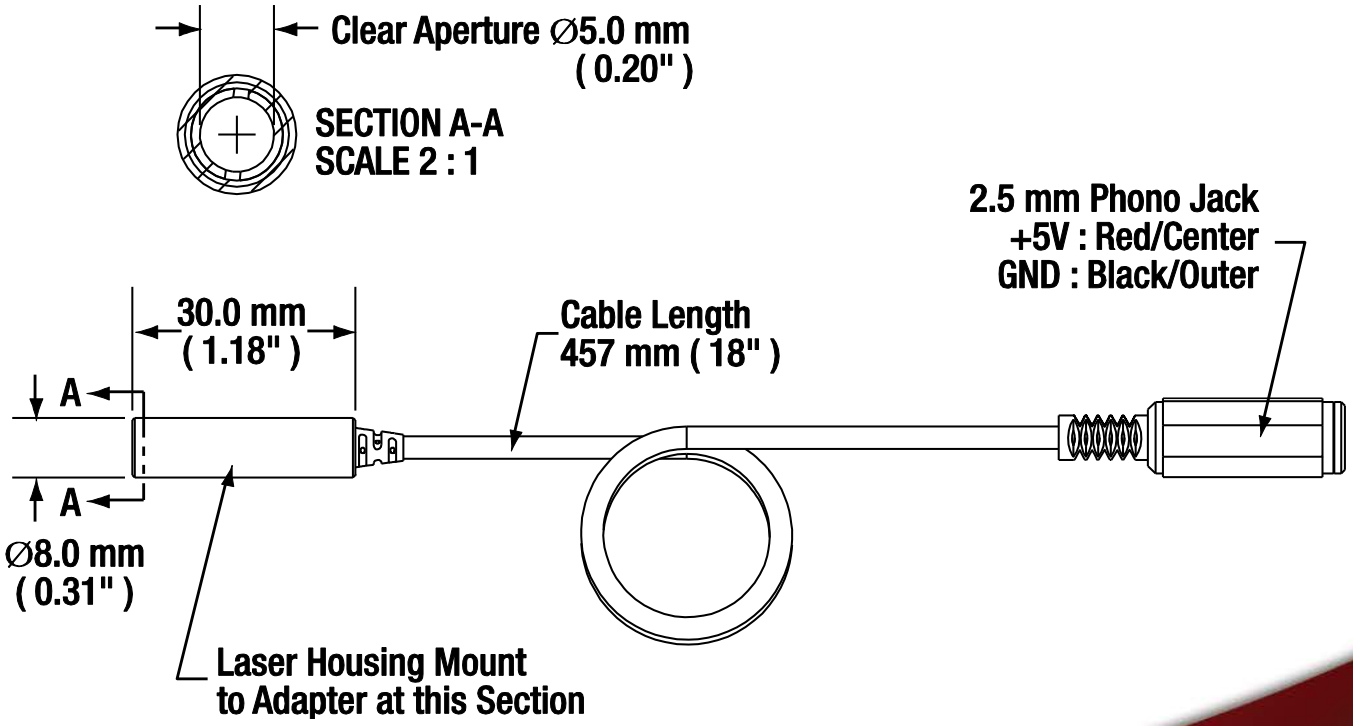
Drawings