Configuration

The M150 comprises one input port and two output ports. The input port may hold either a standard entrance slit, or a crossed entrance slit (optionally). The entrance slit is automated; slit opening width is software-controlled.
The standard optics comprises spherical and flat mirrors with Al+MgF2 coating optimised for high UV efficiency. Optionally the device may contain optics with Al+SiO2 or gold coating for high efficiency in the infrared spectral range.
The M150 includes a turret of three diffraction gratings. At your choice, the number of gratings can be reduced to one or two.

Modification	Components
M150-III	The standard optics and the turret with 3 diffraction gratings
M150-II	The standard optics and the turret with 2 diffraction gratings
M150-I	The standard optics and one diffraction grating
M150i-III	The Imaging optics (astigmatism compensator) and the turret with 3 diffraction gratings
M150i-II	The Imaging optics (astigmatism compensator) and the turret with 2 diffraction gratings
M150i-I	The Imaging optics (astigmatism compensator) and one diffraction grating

The M150 output ports may hold either two exit slits, or one exit slit and a detector, or two detectors simultaneously.
Direct (axial) and lateral (radial) output ports operate alternately. Switching between the output ports is effected manually with the Port Switcher located at the upper cover of the instrument. The switcher moves the folding mirror, which directs light to the lateral (radial) output port. If the switcher is off, light goes to the direct (axial) output port.
The instrument is also available with one axial output port. If the radial output port is not used, it is plugged.
The M150 exit slit has 4 mounting holes M2.5 that allow you fixing your own detector to the slit housing, if necessary.
Location of the mounting holes is shown in the figure below.

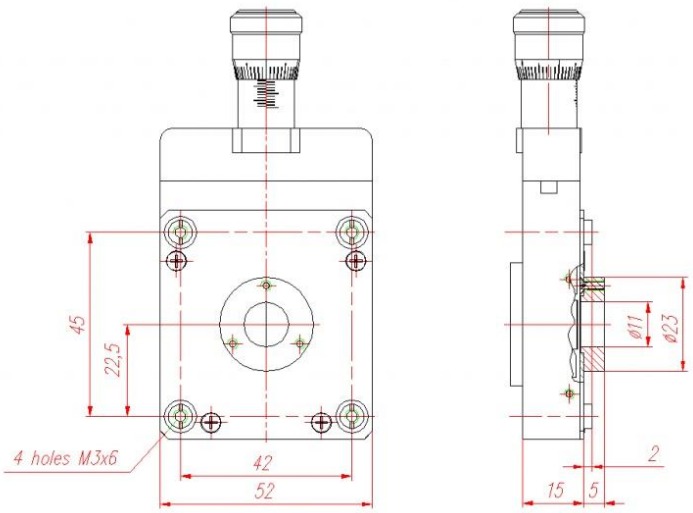

OPTICAL BENCH FEATURES

The M150 is a short-focus monochromator combining compact size with extremely high aperture ratio (F=1:3.6).The main difficulty encountered at the development of the M150 optical bench was a necessity to ensure high optical quality within a miniature short-focus device with large-size optical elements and large angles at mirrors and gratings. This task was solved on the basis of the modified Czerny-Turner optical bench, where the

entrance slit and exit slit (the centre of spectrum) are arranged asymmetrically relative to the diffraction grating. The unique combination of high aperture ratio and outstanding line quality was implemented by careful optimisation of focal distances for collimator and camera mirrors, and of angular relationship at the optical elements. The M150i (Imaging) modification contains a specifically designed astigmatism compensator, which is installed into the M150 optical bench instead of the first folding mirror and ensures absence of astigmatism at both output ports of the instrument. Another difficulty encountered at the stage of theM150 development and brilliantly solved by our designers, was a necessity to place maximum functionality and convenience of use in a miniature design.

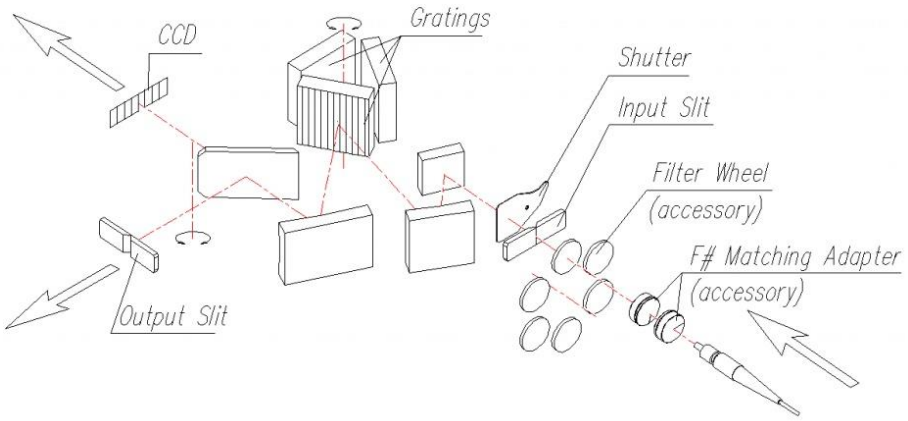

The result is the M150 – **a multifunctional short-focus monochromator-spectrograph featuring the unique combination of performance specifications and equipped with all the options common for large-size monochromators and spectrographs.** The M150 comprises two output ports and provides the possibility of full-featured operation with both of them. Either port may hold an entrance slit with a smooth-focusing mechanism or a CCD-detector with an adapter which provides its easy alignment by focus.

The large 30mmx10mm flat filed of the M150 spectrograph ensures a large multichannel array band-pass and a possibility of high-quality software sewing of spectra obtained in several scans.
The M150 is also compatible with all the accessories: a wheel of order-separating filters, adapters for matching apertures of the fiber and monochromator, adapters for collecting light into the optical fiber, etc.

Astigmatism compensation
Generally, astigmatism is common to all spectral instruments; this is a phenomenon when the point on the entrance slit is displayed in the image plane as a vertical segment. The M150 **astigmatic** segment is 8mm in the center of the flat field, and 6.5 mm and 10 mm at the edges of the field respectively. Astigmatism does not usually impair the instrument resolution, but, depending on the height of the detector used, can affect the overall sensitivity of the system.
Astigmatism correction is imperative in the multichannel spectroscopy, in case you need to adequately convey the light distribution along the slit, as well as for the use of the spectrograph with 2D detectors in the Imaging mode.
The M150i astigmatism compensator is a cylindrical mirror which is installed after the entrance slit instead of a flat folding mirror. Astigmatism is compensated at the both output ports. Introducing the astigmatism compensator in the optical scheme allows correcting astigmatism in the exit slit plane to the value of about 50μm. This fact must be considered when calculating the expected optical resolution of the M150 with a specific grating. Astigmatism compensation also affects the M150 vertical magnification:

M150 magnification	**Horizontal magnification**	**Vertical magnification**
without astigmatism compensation	1.15	1.0
with astigmatism compensation	1.15	1.35

Available models

M150-I Housing with standard optics & one grating of choice
M150-II Housing with standard optics & two gratings of choice
M150-III Housing with standard optics & three gratings of choice

SPECIFICATIONS

Optical scheme Spectral range F/Number Focal length, mm Flat field Imaging	Optimized Czerny-Turner with one optical input and two outputs Typical 190 – 3600 nm (refer to the specification below); extended up to 15 µm (at your request) 1 : 3.6 142 mm 30 x 10 mm Option. Available on both output ports.									
Diffraction gratings	40x40x10mm, turret with 3 gratings from the list below [1]									
- grooves/mm [1]	**1800**	**1200**	**900**	**600**	**600**	**400**	**300**	**200**	**100**	**100**
- blaze wavelength, nm	270	400	600	750	1000	800	1500	1500	2000	500
- reciprocal linear dispersion (average), nm/mm	3.2	4.9	6.4	9.8	9.4	15.2	20.1	30.4	63	68
- spectral range [2], nm	190-540	265-800	400-1200	500-1500	660-1800	530-1600	1000-3000	1000-3000	1330-4000	330-1000
- multichannel array bandpass (average), nm	81 [3]	126 [3]	165 [3]	250 [3]	120 [4]	194 [4]	257 [4]	388 [4]	800 [4]	870 [4]
- resolution (average), nm	0.2 [3] 0.13 [5]	0.3 [3] 0.2 [5]	0.4 [3] 0.27 [5]	0.6 [3]	0.6 [4]	0.95 [4]	1.25 [4]	1.9 [4]	3.8 [4]	4.2 [4]
Entrance slit Slit width Slit height Parallelism Step size	Motor Driven 0 - 3 mm 10 mm +/- 1 µm 0.43 µm									
Exit slits Slit width Slit height Parallelism Micrometer reading accuracy	Micrometer driven 0 - 3 mm 10 mm +/- 1 µm +/- 1.5 µm									
Filter wheel Max number of filters Standard number of filters Filter size Light aperture	Automatic switching 6 5 20 mm 18 mm									
Integrated shutter	Program-controlled, serves for measuring dark signal									
Computer interface	Full-Speed USB interface									
Dimensions, weight	308 x 226 x 188 mm, 12 kg									

[1] Upon your request diffraction gratings with a different number of grooves per mm and blaze angle can be used.
[2] Wavelength range with diffraction efficiency higher than 40%
[3] For the detector with 25µm pixel size and 25.6mm length of active area
[4] For the detector with 25µm pixel size and 12.8mm length of active area
[5] For the detector with 8µm pixel size and 29.1mm length of active area

OPTIONS and ACCESSORIES

The M150 monochromator-spectrograph has a wide range of options and accessories ensuring efficient collection of light from the sample located at a finite distance and in infinity, delivering light to the monochromator with and without an optical fiber, performing effective aperture matching of the optical fiber and monochromator.
All the exit slits are equipped with a precision focusing devices; and detector adapters allow easy detector focusing.

Cassegrain lenses allow collecting light from objects located at a distance of 3.5 m to infinity.
Adapters PS-2 and PS-3 provide for the collection of light from a closely located sample and its effective input into an optical fiber. PS-2 features high transmittance in the UV range, while PS-3 has the possibility of installing an edge filter.

- Order Separating Filters Wheels
- Aperture Matching Adapters
- Condensers for collecting light into the fiber
- Condensers for collecting light into the monochromator
- Crossed Entrance Slit (optionally installed instead of the Standard Entrance Slit)
- Optical Fibers
- Adapters for attaching CCD detectors
- CCD detectors
- Cassegrain lenses

Consult a Standa Ltd. specialist to select the complete set of your monochromator\spectrograph that best meets the requirements of your instrument complex.

Multi-channel CCD detectors supplied with M150

Multichannel CCD detectors – **The unique vacuum technology Ultravac™; deep thermoelectric cooling (down to -100 ⁰C).**	
iVac Series, Spectroscopic CCD	DR 324B-FI model, front-illuminated CCD sensor, UltraVac™ thermo-electric cooling down to -60°C, spectral range 400-1000nm, 1650x200pixels, pixel size 16x16µm, image area 26.4mm x 3.2mm, 16 bits digitization.
iDus Series, Spectroscopic CCD	DV 401A-BV model, back-illuminated CCD sensor, UltraVac™ thermo-electric cooling down to -70°C, Spectral range 200-1100nm, 1024x127pixels, pixel size 26x26µm, image area 26.6mm x 3.6mm, 16 bits digitization.
	DU 401A-BV model, back-illuminated CCD sensor, UltraVac™ thermo-electric cooling down to -100°C. Spectral range 200-1100nm, 1024x127pixels, pixel size 26x26µm, image area 26.6mm x 3.6mm, 16 bits digitization.
Newton Series, EMCCD	DU970P-FI model (*), front-illuminated EMCCD sensor, UltraVac™ thermo-electric cooling down to -100°C, spectral range 400-1000nm, 1600x200pixels, pixel size 16x16µm, dual output amplifier, crop mode, Variable readout speed up to 3MHz, 16 bits digitization.
	DU970P-BV model (*), back-illuminated EMCCD sensor, UltraVac™ thermo-electric cooling down to -100°C, spectral range 200-1000nm, 1600x200pixels, pixel size 16x16µm, dual output amplifier, crop mode, Variable readout speed up to 3MHz, 16 bits digitization.
iStar Series, Gated iCCD	DH320T-25U-03 model (*), Ultra Fast Gated Intensified CCD Camera, spectral range 200-900nm, 124x256 CCD 100% Fill Factor, 25mm tube, Gen2 Multialkali S20 Photocathode, P43 phosphor Multi-Mhz Readout Speeds, Integrated Digital Delay Generator, 3 ns Crop Mode sensor, Photocathode dry gas purge port, USB data interface.

(*) other models are supplied upon request

Two-dimensional HAMAMATSU arrays for the 200-1100nm range	
UC-16H7306, Spectroscopic CCD	S7030-1006 sensor, non-cooled, spectral range 200-1100nm, 1024x64 pixels, pixel size 24x24µm, image area 24.6x1.4mm, 16 bit digitization.
UC-16H7307, Spectroscopic CCD	S7030-1007 sensor, non-cooled, spectral range 200-1100nm, 1024x128 pixels, pixel size 24x24µm, image area 24.6x2.9mm, 16 bit digitization.
UC-16H7316, Spectroscopic CCD	S7031-1006 back-illuminated sensor, TE cooling –10°C, spectral range 200-1100nm, 1024x64 pixels, pixel size 24x24µm, image area 24.6x1.4mm, 16 bit digitization.
UC-16H7317, Spectroscopic CCD	S7031-1007 back-illuminated sensor, TE cooling –10°C, spectral range 200-1100nm, 1024x128 pixels, pixel size 24x24µm, image area 24.6x2.9mm, 16 bit digitization.
UC-16H7318, Spectroscopic CCD	S7031-1008 back-illuminated sensor, TE cooling –10°C, spectral range 200-1100nm, 1024x256 pixels, pixel size 24x24µm, image area 24.6 x 6.1mm, 16 bit digitization.
Linear InGaAs HAMAMATSU sensors for NIR-range 900-1700nm (up to 2600nm)	
UC-16H904, InGaAs sensor	G9204-512D image sensor, spectral range 0.9-1.7µm, non-cooled, 512 pixels, pixel size 25x500µm, image area 12.8x0.5mm, 16 bit digitization.
UC-16H912, InGaAs sensor	G9212-512S image sensor, InGaAs, spectral range 0.9-1.7µm, TE cooling –10°C, 512 pixels, pixel size 25x250µm, image area 12.8x0.25mm, 16 bit digitization.
UC-16H914, InGaAs sensor	G9214-512S image sensor, InGaAs, spectral range 0.9-1.7µm, TE cooling –10°C, 512 pixels, pixel size 25x500µm, image area 12.8x0.5mm, 16 bit digitization.
UC-16H908, InGaAs sensor	G9208-256W image sensor, InGaAs, spectral range 0.9-2.6µm, TE cooling –20°C, 256

	pixels, pixel size 50x250µm, image area 12.8x0.25mm, 16 bit digitization.
Linear non-cooled sensors for the 200-1100nm range	
UC-12T3	TCD1304 image sensor, spectral range 190-1100nm, non-cooled, 3648 pixels, pixel width 8µm, image area 29.18x0.2mm, 14 bit digitization.
UC-12T2	TCD1205 image sensor, spectral range 200-1100nm, non-cooled, 2048 pixels, pixel width 14µm, image area 28.672x0.2mm,14 bit digitization.
UC-14H83	S8378-1024Q image sensor, spectral range 200-1100nm, non-cooled, 1024 pixels, pixel width 25µm, image area 25.6x0.2mm,14 bit digitization.
U2C-16H11156	S11156-2048-01 image sensor, spectral range 200-1100nm, non-cooled, 2048 pixels, pixel width 14µm, element size 28.672x1.0mm, 16 bit digitization, integrated electric shutter, reading rate 5MHz, min. storage time 31µs.