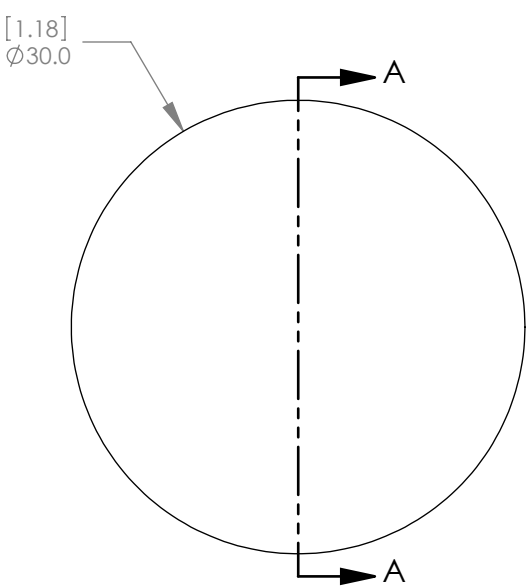

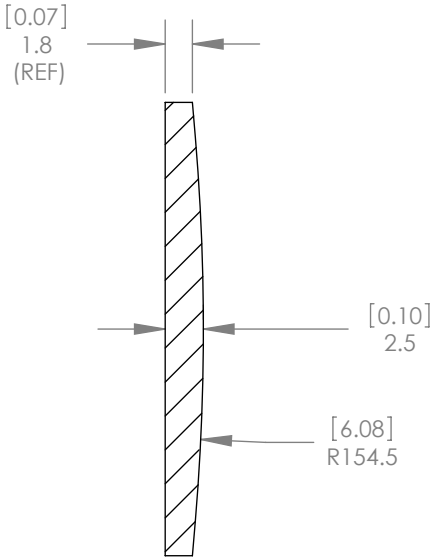

SECTION A-A

1:1 ISOMETRIC VIEW FOR REFERENCE ONLY

NOTES/SPECIFICATIONS:

1. DESIGN WAVELENGTH: 587.6nm
2. FOCAL LENGTH: f=299.0mm ± 1%
3. BACK FOCAL LENGTH(REF): bf=297.3mm
4. CLEAR APERTURE: >90%
5. SURFACE QUALITY: 40-20 SCRATCH-DIG
6. CENTRATION: <3arcmin
7. DIAMETER TOLERANCE: +0.0/-0.1mm
8. THICKNESS TOLERANCE: ±0.1mm
9. COATING: BBAR Ravg<0.5% FROM 650nm-1050nm, 0° AOI, ON OUTER OPTICAL SURFACES

ALL DIMENSIONS ARE IN THE FORM [in] / mm.

THIS DRAWING IS FOR INFORMATION ONLY
NOT INTENDED FOR MANUFACTURING

	NAME	DATE
DRAWN	WD	11/19/2009
ENG APPR.	BW	11/24/2009
MFG APPR.	DD	12/09/2009

PROPRIETARY AND CONFIDENTIAL

THE INFORMATION CONTAINED IN THIS DRAWING IS THE SOLE PROPERTY OF THORLABS, INC. ANY REPRODUCTION IN PART OR AS A WHOLE WITHOUT THE WRITTEN PERMISSION OF THORLABS, INC. IS PROHIBITED.

THORLABS INC. PO BOX 366 NEWTON NJ

TITLE: D=30.0 F=300.0 N-BK7 B COAT PLANO CONVEX LENS

MATERIAL: N-BK7

SIZE: A

REV.: C

SCALE: 2:1

SHEET 1 OF 1

DWG. NO. 19323-E01

PART NO. LA1419-B

5 4 3 2 1