User Manual

Photonfocus

MV0 Python 3D06 Camera Series

3D CMOS camera series with GigE Interface

MV0-D1280-O01-3D06-288-G2

MV0-D1984-O01-3D06-576-G2

MV0-D2592-O01-3D06-576-G2 (available on request)

MAN082 09/2019 V1.0

All information provided in this manual is believed to be accurate and reliable. No responsibility is assumed by Photonfocus AG for its use. Photonfocus AG reserves the right to make changes to this information without notice.

Reproduction of this manual in whole or in part, by any means, is prohibited without prior permission having been obtained from Photonfocus AG.

Contents

1 Preface **7**
- 1.1 IMPORTANT NOTICE! . . . 7
- 1.2 About Photonfocus . . . 8
- 1.3 Contact . . . 8
- 1.4 Sales Offices . . . 8
- 1.5 Further information . . . 8
- 1.6 Legend . . . 9

2 Introduction **11**
- 2.1 Introduction . . . 11
- 2.2 Camera Naming Convention . . . 11
- 2.3 Camera list . . . 11

3 Product Specification **13**
- 3.1 Introduction . . . 13
- 3.2 Feature Overview . . . 15
- 3.3 Technical Specification . . . 16
  - 3.3.1 Absolute Maximum Ratings . . . 18
  - 3.3.2 Electrical Characteristics . . . 18
  - 3.3.3 Spectral Response . . . 19

4 Image Acquisition **21**
- 4.1 Overview . . . 21
  - 4.1.1 Vocabulary . . . 21
  - 4.1.2 Structure . . . 21
  - 4.1.3 Image Acquisition, Frame and Exposure Control Parameters . . . 22
  - 4.1.4 Image Acquisition, Frame and Exposure Trigger . . . 23
  - 4.1.5 Image Acquisition, Frame and Exposure Status . . . 23
- 4.2 Acquisition Control . . . 24
  - 4.2.1 Acquisition Start and Stop Commands, Acquisition Mode and Acquisition Frame Count . . . 24
  - 4.2.2 Acquisition Frame Rate and Acquisition Frame Rate Enable . . . 24
  - 4.2.3 Acquisition Start Trigger . . . 25
  - 4.2.4 Acquisition End Trigger . . . 26
  - 4.2.5 Acquisition Control Output Signals . . . 26
- 4.3 Frame Control . . . 27
  - 4.3.1 Frame Start Trigger . . . 27
  - 4.3.2 Frame Burst Start Trigger . . . 27
  - 4.3.3 Frame Burst End Trigger . . . 28
  - 4.3.4 Frame Control Output Signals . . . 29
- 4.4 Exposure Control . . . 30
  - 4.4.1 Exposure Mode . . . 30

4.4.2 Exposure Start Trigger . . . 30
4.4.3 Exposure End Trigger . . . 30
4.4.4 Exposure Control Output Signals . . . 31
4.5 Overlapped Image Acquisition Timing . . . 32
4.6 Acquisition-, Frame- and Exposure-Trigger Configuration . . . 34
4.6.1 Trigger Source Selection . . . 34
4.6.2 Trigger Software . . . 35
4.6.3 Trigger Mode . . . 35
4.6.4 Trigger Activation . . . 35
4.6.5 Trigger Divider . . . 36
4.6.6 Trigger Delay . . . 36
4.7 Software Signal Pulse and User Output . . . 37

5 Counter & Timer 39
5.1 Counter . . . 39
5.1.1 Counter Usage . . . 39
5.1.2 Counter Status . . . 40
5.1.3 Counter Active, -Start and -End Signal . . . 40
5.1.4 Counter Reset . . . 40
5.1.5 Counter Event Source . . . 41
5.1.6 Counter Trigger Source . . . 42
5.1.7 Counter Reset Source . . . 43
5.2 Timer . . . 45
5.2.1 Timer Usage . . . 45
5.2.2 Timer Status . . . 45
5.2.3 Timer Active, -Start and -End Signal . . . 46
5.2.4 Timer Reset . . . 46
5.2.5 Timer Trigger Source . . . 46

6 Encoder 49
6.1 Encoder Usage . . . 49
6.2 Encoder trigger output . . . 50
6.3 Encoder Status . . . 50
6.4 Encoder Reset Source . . . 51

7 I/O Control 53
7.1 Input Signal Path . . . 53
7.2 Output Signal Path . . . 54

8 Action Control 55
8.1 Action Command Usage . . . 55
8.2 Action Control Output . . . 56

9 Image Format Control 57
9.1 Region of Interest (ROI) . . . 57

10 Frame Rate 59
10.1 Exposure time is dominant . . . 59
10.2 Image size is dominant and limited by interface . . . 59
10.3 Image size is dominant and limited by sensor . . . 59
10.4 Maximum Frame Rate (2Donly mode) . . . 60
10.5 Maximum Frame Rate in 3D modes . . . 60

11 Image Data Processing **63**
11.1 Overview . . . 63
11.2 Column FPN Correction . . . 64
11.2.1 Enable / Disable the Column FPN Correction . . . 64
11.2.2 Calibration of the Column FPN Correction . . . 64
11.2.3 Storing the calibration in permanent memory . . . 65
11.3 Gain and Offset . . . 65
11.4 Laser test image . . . 65
11.5 3D Features . . . 66
11.5.1 Overview . . . 66
11.5.2 Measuring Principle . . . 66
11.5.3 Laser Line Detection . . . 67
11.5.4 Interpolation Technique . . . 71
11.5.5 3D modes . . . 73
11.5.6 3D data format . . . 73
11.5.7 Transmitted data in 2D&3D mode . . . 75
11.5.8 Transmitted data in 3Donly mode . . . 76
11.5.9 Frame Combine . . . 77
11.5.10 Peak Filter . . . 79
11.5.11 Peak Mirror . . . 81
11.5.12 Absolute Coordinates . . . 81
11.5.13 High speed mode . . . 81
11.6 Status Line and Image Information . . . 82
11.6.1 Image Average Value . . . 82
11.6.2 Status Information . . . 82
11.6.3 Camera Type Codes . . . 82
11.7 Test Images . . . 85
11.7.1 Ramp . . . 86
11.7.2 LFSR . . . 86
11.7.3 Troubleshooting using the LFSR . . . 87

12 Precautions **89**
12.1 IMPORTANT NOTICE! . . . 89

13 Hardware Interface **93**
13.1 Absolute Maximum Ratings . . . 93
13.2 Electrical Characteristics . . . 93
13.3 GigE Camera Connector . . . 93
13.4 Power Over Ethernet (PoE) . . . 93
13.5 Status Indicator (GigE cameras) . . . 94
13.6 I/O Connector . . . 95
13.6.1 Overview . . . 95
13.6.2 Encoder Interface . . . 96
13.6.3 Single-ended Line Input . . . 96
13.6.4 Single-ended Line Output . . . 98
13.6.5 Master / Slave Camera Connection . . . 99

14 Mechanical Considerations **101**
14.1 Mechanical Interface . . . 101
14.1.1 Cameras with GigE Interface . . . 101
14.2 Optical Interface . . . 102
14.2.1 Cleaning the Sensor . . . 102

15 Troubleshooting **105**
15.1 No images can be acquired . . . 105
15.1.1 No acquisition due to no triggers . . . 105

16 Standards Compliance **107**
16.1 Directives and General Standards . . . 107
16.2 Country-specific Information . . . 107
16.2.1 For customers in the USA . . . 107
16.2.2 For customers in Canada . . . 108
16.2.3 Pour utilisateurs au Canada . . . 108
16.3 Life support applications . . . 108

17 Warranty **109**
17.1 Warranty Terms . . . 109
17.2 Warranty Claim . . . 109
17.3 Breach of Warranty . . . 109

18 Support and Repair **111**
18.1 Technical Support . . . 111
18.2 Repair and obtaining an RMA Number . . . 111
18.3 Temporal Abandoning and Scrapping . . . 111

19 References **113**

A Pinouts **115**
A.1 I/O Connector . . . 115
A.2 GigE Connector . . . 115

B Camera Timing **117**
B.1 Timed Exposure Mode Camera Timing . . . 117

C Use Cases **119**
C.1 Acquisition . . . 119
C.1.1 Camera runs in "free-running" mode . . . 119
C.1.2 Camera runs in "constant frame rate" mode . . . 119
C.1.3 Camera runs in triggered mode . . . 120
C.1.4 Camera runs in burst triggered mode . . . 120
C.1.5 Triggered controlled exposure mode . . . 121
C.2 Timer . . . 122
C.2.1 Strobe Signal Output . . . 122
C.3 Counter . . . 123
C.3.1 Counter Reset . . . 123
C.3.2 Image Counter . . . 123
C.3.3 Real Time Counter . . . 123
C.3.4 Missed Trigger Counter . . . 124

D Document Revision History **125**

1

Preface

1.1 IMPORTANT NOTICE!

READ THE INSTRUCTIONS FOR USE BEFORE OPERATING THE CAMERA

STORE THE INSTRUCTIONS FOR USE FOR FURTHER READING

Photonfocus AG
Bahnhofplatz 10
CH-8853 Lachen SZ
Switzerland
www.photonfocus.com
info@photonfocus.com
+41 – 55 451 00 00

1.2 About Photonfocus

The Swiss company Photonfocus is one of the leading specialists in the development of CMOS image sensors and corresponding industrial cameras for machine vision.

Photonfocus is dedicated to making the latest generation of CMOS technology commercially available. Active Pixel Sensor (APS) and global shutter technologies enable high speed and high dynamic range (120 dB) applications, while avoiding disadvantages like image lag, blooming and smear.

Photonfocus' product range is complemented by custom design solutions in the area of camera electronics and CMOS image sensors.

Photonfocus is ISO 9001 certified. All products are produced with the latest techniques in order to ensure the highest degree of quality.

1.3 Contact

Photonfocus AG, Bahnhofplatz 10, CH-8853 Lachen SZ, Switzerland

Sales	Phone: +41 55 451 00 00	Email: sales@photonfocus.com
Support	Phone: +41 55 451 00 00	Email: support@photonfocus.com

Table 1.1: Photonfocus Contact

1.4 Sales Offices

Photonfocus products are available through an extensive international distribution network and through our key account managers. Find your local Photonfocus contact at our homepage (www.photonfocus.com) or contact us via email at sales@photonfocus.com.

1.5 Further information

Photonfocus reserves the right to make changes to its products and documentation without notice. Photonfocus products are neither intended nor certified for use in life support systems or in other critical systems. The use of Photonfocus products in such applications is prohibited.

Photonfocus and LinLog® are registered trademarks of Photonfocus AG. CameraLink® and GigE Vision® are a registered mark of the Automated Imaging Association (AIA). Product and company names mentioned herein are trademarks or trade names of their respective companies.

Reproduction of this manual in whole or in part, by any means, is prohibited without prior permission having been obtained from Photonfocus AG.

Photonfocus can not be held responsible for any technical or typographical errors.

1.6 Legend

In this documentation the reader's attention is drawn to the following icons:

Important note, additional information

Important instructions

General warning, possible component damage hazard

Warning, electric shock hazard

Warning, fire hazard

2

Introduction

2.1 Introduction

This manual describes the Photonfocus MV0 Python 3D06 series cameras that have a Gigbit Ethernet (GigE) interface. The cameras contain PYTHON1300, PYTHON2000 and PYTHON5000 from ON Semiconductor.

2.2 Camera Naming Convention

The naming convention of the MV0 Python camera series is summarized in Fig. 2.1.

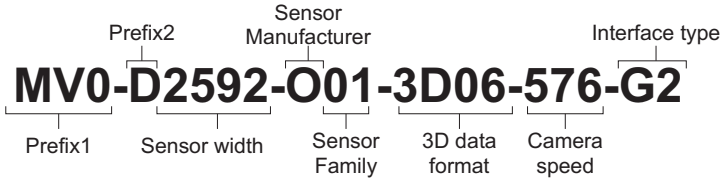

Figure 2.1: Camera naming convention

Prefix1 Camera platform and usage prefix. The following prefix are available for this camera series: MV0 with form factor 30x30.

Prefix2 Camera family specifier. The following specifiers are used in this manual: "D": digital standard area scan cameras.

Sensor width Width of image sensor of the camera.

Sensor Manufacturer Sensor manufacturer. "O": ON Semiconductor

Sensor Family Sensor family of the prior indicated manufacturer. "01": Python series

3D coordinate data format Available 3D coordinate data formats are: "3D06": integer part 12 digits, fractional part 4 digits (see also Section 11.5.6).

Camera speed The camera speed is usually the product of the camera interface clock in MHz and the number of parallel interface channels (taps).

Interface type Interface type specification: "CL": CameraLink® , "G2": Gigabit Ethernet (GigEVision), "U3": USB3 (USB3 Vision).

2.3 Camera list

A list of all cameras covered in this manual is shown in Table 2.1.

Name	Max Resolution	Max Frame Rate	Notes
MV0-D1280-O01-3D06-288-G2	1280 x 1024	6746 fps [1)]	Gigabit Ethernet 1.3 MP monochrome 3D camera.
MV0-D1984-O01-3D06-576-G2	1984 x 1264	7968 fps [1)]	Gigabit Ethernet 2.5 MP monochrome 3D camera.
MV0-D2592-O01-3D06-576-G2 [2)]	2592 x 2048	TBD fps [1)]	Gigabit Ethernet 5 MP monochrome 3D camera.

Table 2.1: Camera models covered by this manual (Footnotes: [1)] frame rate in 3Donly mode and @ 640 x 11 resolution [2)] available on request)

3 Product Specification

3.1 Introduction

The Photonfocus MV0 Python GigE camera series is built around the CMOS image sensors PYTHON1300, PYTHON2000 and PYTHON5000 from ON Semiconductor. They provide a resolution of 1280 x 1024 (PYTHON1300), 1984 x 1264 (PYTHON2000) and 2592 x 2048 (PYTHON5000) pixels. The camera series is optimized for low light conditions. The cameras are aimed at standard applications in industrial image processing where high sensitivity and high frame rates are required.

The principal advantages are:

- Up to 7968 (PYTHON2000)/6746 (PYTHON1300) profiles/s @ 640 x 11 resolution
- Choice of two laser line detection algorithms, LineFinder or Center of Gravity (COG)
- High reliability and accuracy of 3D reconstruction, due to the non-linear interpolation technique used in the LineFinder detection algorithm
- Higher accuracy detection of symmetrical profiles with the COG algorithm
- Laser line detection with up to 1/16 sub pixel accuracy
- Gigabit Ethernet interface with GigE Vision and GenICam compliance
- Combined 2D/3D applications can be realized in the 2D/3D mode of the camera (at a reduced frame rate)
- Global shutter
- Image sensor with high sensitivity
- Region of interest (ROI) freely selectable in x and y direction
- Column Fixed Pattern Noise Correction for improved image quality.
- I/O capabilities: 2 isolated trigger inputs and 1 isolated output
- A/B shaft encoder interface
- The rugged housing at a compact size of 30 x 30 x 54.2 mm^3 makes the Photonfocus MV0 Python 3D06 GigE camera series the perfect solution for applications in which space is at a premium.
- Free GUI available (PF 3D Suite) for an easy system set up and visualisation of 3D scans

The basic components for 3D imaging consist of a laser line and a high speed CMOS camera in a triangular arrangement to capture images (profiles) from objects that are moved on a conveyor belt or in a similar setup (see Fig. 3.1 and Section 11.5.2).

You can find more information on the basics of laser triangulation and on the principles of 3D image acquisition technique in the user manual "PF 3D Suite" available in the support area at www.photonfocus.com.

The general specification and features of the camera are listed in the following sections.

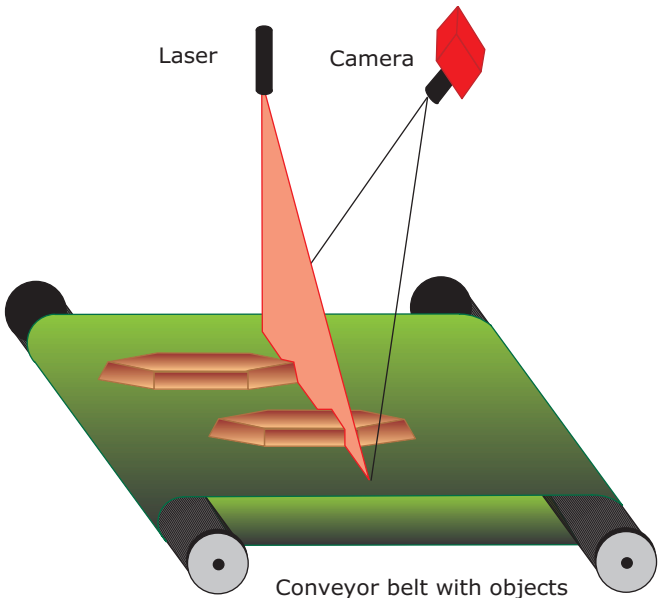

Figure 3.1: Triangulation principle with objects moved on a conveyor belt

Figure 3.2: Photonfocus MV0 Python GigE camera series

3.2 Feature Overview

The general specification and features of the camera are listed in the following sections. The detailed description of the camera features is given in the following chapters.

Characteristics	Photonfocus MV0 Python 3D06 GigE Camera Series
Interface	Gigabit Ethernet (PoE), GigE Vision and GenICam compliant
Camera Control	GigE Vision Suite / PF 3D Suite
Trigger Modes	Software Trigger / External isolated trigger input
Features	• Greyscale resolution 8 bit • Region of Interest (ROI) • Laser line detection (LineFinder/COG) • Column Fixed Pattern Noise correction for improved image quality • Test pattern (LFSR and grey level ramp) • Image information and camera settings inside the image (status line) • 2 isolated trigger inputs and 1 isolated output • A/B shaft encoder interface

Table 3.1: Feature overview

3.3 Technical Specification

	1.3 MPix Cameras	2.5 MPix Cameras
Sensor Manufacturer	ON Semiconductor	ON Semiconductor
Sensor Type	PYTHON1300	PYTHON2000
Technology	CMOS active pixel	
Scanning system	progressive scan	
Optical format / diagonal	1/2" (7.87 mm diagonal)	2/3" (11.29 mm diagonal)
Resolution	1280 x 1024 pixels	1984 x 1264 pixels
Pixel size	4.8 μm x 4.8 μm	
Active optical area	6.14 mm x 4.92 mm	9.52 mm x 6.07 mm
Full well capacity	10 ke^-	
Readout noise	9 e^-	
Spectral range standard sensor	330 to 930 nm (to 10 % of peak responsivity)	
Conversion gain	0.096 LSB/e^-	0.107 LSB/e^-
Sensitivity (with micro lenses)	7.7 V / lux.s (@ 550 nm)	7.5 V / lux.s (@ 550 nm)
Optical fill factor	> 80 % (without micro lenses)	
Dark current	5 e^-/s @ 20°C	9.3 e^-/s @ 20°C
Dynamic range	61 dB	
Micro lenses	Yes	
Characteristic curve	Linear	
Shutter mode	global shutter	
Sensor bit depth	10 bit	
Maximal frame rate [1)]	See Chapter 10	
Camera pixel formats	8 bit	
Digital gain	0.1 to 15.99 (Fine Gain)	
Exposure time range	10 μs ... 419 ms	10 μs ... 419 ms

Table 3.2: General specification of the Photonfocus MV0 Python GigE camera series

	5.3 MPix Cameras
Sensor Manufacturer	ON Semiconductor
Sensor Type	PYTHON5000
Technology	CMOS active pixel
Scanning system	progressive scan
Optical format / diagonal	1" (15.86 mm diagonal)
Resolution	2592 x 2048 pixels
Pixel size	4.8 μm x 4.8 μm
Active optical area	12.44 mm x 9.83 mm
Full well capacity	10 ke$^-$
Readout noise	9 e$^-$
Spectral range standard sensor	330 to 930 nm (to 10 % of peak responsivity)
Conversion gain	0.107 LSB/e$^-$
Sensitivity (with micro lenses)	7.5 V / lux.s (@ 550 nm)
Optical fill factor	> 80 % (without micro lenses)
Dark current	9.3 e$^-$/s @ 20°C
Dynamic range	61 dB
Micro lenses	Yes
Characteristic curve	Linear
Shutter mode	global shutter
Sensor bit depth	10 bit
Maximal frame rate [1)]	See Chapter 10
Camera pixel formats	8 bit
Digital gain	0.1 to 15.99 (Fine Gain)
Exposure time range	10 μs ... 419 ms

Table 3.3: General specification of the Photonfocus MV0 Python GigE camera series

	Photonfocus MV0 Python GigE Camera Series
Operating temperature / moisture	0°C ... 50°C / 20 ... 80 % (camera needs to be connected to heat sink)
Storage temperature / moisture	-25°C ... 60°C / 20 ... 95 %
Trigger signal input range	+5 .. +20 V DC
Maximal power consumption	< TBD W
Lens mount	C-Mount
I/O Inputs	2x Opto-isolated
I/O Outputs	1x Opto-isolated
Dimensions	30 x 30 x 54.2 mm^3
Mass	75 g
Connector I/O	Binder M5 x 0.5, 4 pole, series 707
Connector Interface (Power)	X-coded M12
Conformity	CE / RoHS / WEEE
IP Code	IP40

Table 3.4: Physical characteristics and operating ranges

3.3.1 Absolute Maximum Ratings

Parameter	Value
Camera Control Input Signal Voltage Single Ended	0 V ... +24 V
Camera Control Output Signal Voltage Single Ended	0 V ... +24 V
Camera Control Output Signal Output Current Single Ended	0.1 A
Camera Control Output Signal Output Power Single Ended	0.15 W
ESD Contact Discharge Camera Control Signals	4 kV
ESD Air Discharge Camera Control Signals	8 kV
Fast Transients/Bursts Data and Camera Control Signals	2 kV
Surge immunity Data and Camera Control Signals	1 kV
Maximum Installation Altitude	2000m above sea level

Table 3.5: Absolute Maximum Ratings

3.3.2 Electrical Characteristics

Parameter	Value
Camera Control Input Single Ended	+5 V ... +20 V

Table 3.6: Electrical Characteristics

3.3.3 Spectral Response

Fig. 3.3 shows the quantum efficiency curve of the monochrome PYTHON1300/2000/5000 sensors from ON Semiconductor measured in the wavelength range from 300 nm to 1100 nm.

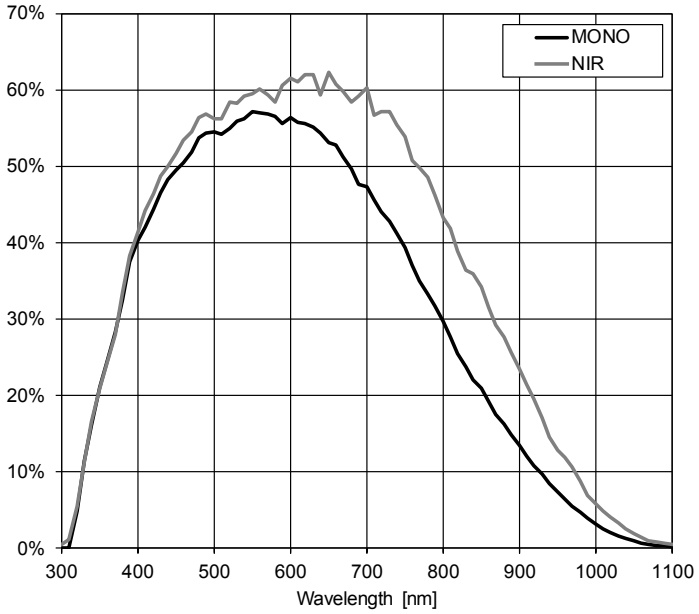

Figure 3.3: Quantum efficiency (QE) [%] of the PYTHON1300/2000/5000 monochrome and near infrared image sensors (with micro lenses)

4

Image Acquisition

This chapter gives detailed information about the controlling of the image acquisition. It shows how the camera can be triggered or run in free-running mode, and how the frame rate can be configured.

The structure offers a lot of flexibility in the configuration. It follows the GenICam naming convention. Typical camera configurations are included in the chapter "Use Cases" in the Appendix C.

4.1 Overview

The overview shows the major camera elements which are involved in the image acquisition. The section starts with a description of the vocabulary and terms, which are used to explain the acquisition related features.

4.1.1 Vocabulary

An acquisition is composed of one or many frames. A frame is a single acquired image which consists of an exposure time and an image read out. A burst of frame is defined as a capture of a group of one or many frames within an acquisition. An acquisition can be grouped in N single frames or N burst of frames.

4.1.2 Structure

The image acquisition is controlled by the three sub-blocks acquisition control, frame control and exposure control. Furthermore the camera contains controller blocks which take care of the I/O signals, the counters, the timers, the encoders, the action signals, the software signals and the user outputs. All of these elements can be connected through an interconnect, which allows controlling the image acquisition by these elements.

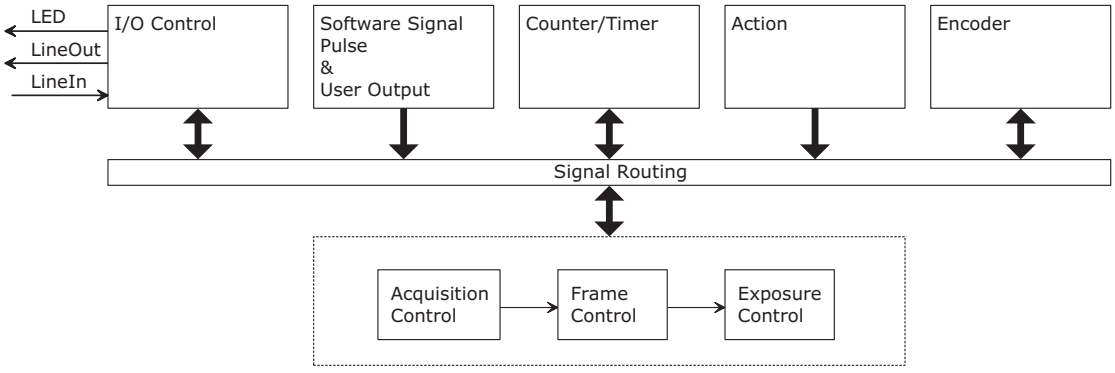

Figure 4.1: Structure

Acquisition Control The acquisition control block takes care of the acquisition function. The camera can only capture frames, when the acquisition has been started and is active (see Section 4.2 for more information).

Frame Control The frame control block takes care of the capturing of one or many frames and burst of frames (see Section 4.3 for more information).

Exposure Control The exposure control block takes care of the exposure time of a frame (see Section 4.4 for more information).

Counter The camera has four independent counters. They count events from a selectable source (see Section 5.1 for more information about counter configuration and usage).

Timer The camera has four independent timers. A timer delay and duration are configurable and the timers are triggered by a selectable source (see Section 5.2 for more information about timer configuration and usage).

Encoder The camera has a configurable encoder block. A/B trigger signals are decoded to generate internal trigger signals from selectable sources (see Chapter 6 for more information about encoder configuration and usage).

Action There are four actions, which can be used to trigger functions in the GigE camera, such like aquisition and frame capture or counter and timer. Action commands can be generated by the host application and are transmitted via GigE interface to the camera with low latency and low jitter.

I/O Control The I/O control unit manages physical camera inputs and outputs and LED. A switch matrix within this block allows connecting internal status signals to the output lines or LED. Status signals can come from the acquisition, frame or exposure control block, also from timer or counter, or even input lines can be routed to an output. The input lines can be used to control the acquisition, frame and/or exposure, also to start a timer or count events with a counter (see Chapter 7 for more information).

Software Signal Pulse and User Output The camera has user outputs, which can be set to 1 or 0 by software access, and a software signal pulse generator block (see Section 4.7). These user outputs and signal pulses can be used to control camera functions by software access, such like acquisition and frame capture or counter and timer.

Signal Routing All these elements are connected to each other by the signal routing block. The following sections show which signals are available and how they can be used in the others blocks.

4.1.3 Image Acquisition, Frame and Exposure Control Parameters

Mainly the following commands/settings are involved in order to control and configure the camera acquisition and frame capturing:

- Acquisition Start and Stop Command
- Acquisition Mode (Single Frame, Multi Frame, Continuous Frame)
- Acquisition Frame Count
- Acquisition Frame Burst Count
- Acquisition Frame Rate
- Exposure Mode (Timed, Trigger Controlled)
- Exposure Time

This list shows only an overview of available parameters. The function and usage of them are explained in the following chapters.

4.1.4 Image Acquisition, Frame and Exposure Trigger

The camera can run in "free-running" mode, which means that it captures images automatically in full frame rate once the acquisition has been started. However the acquisition and image capturing can be controlled by triggers. For this purposes, there are seven triggers available:

- Acquisition Start Trigger
- Acquisition End Trigger
- Frame Start Trigger
- Frame Burst Start Trigger
- Frame Burst End Trigger
- Exposure Start Trigger
- Exposure End Trigger

The source of these trigger can be set for every trigger individually; it can come from an external line, an internally generated pulse from the counters, the timers, the encoder , the action signals or from a pulse generated by a software command. Each of these triggers can be switched on or off individually. The camera generates the triggers pulses internally, which are switched off. The following sections (Acquisition, Frame & Exposure Control) show the usage of these triggers.

Each trigger has its own source signal processing path. Section 4.6 gives more information about the configuration.

4.1.5 Image Acquisition, Frame and Exposure Status

The following list shows the acquisition, frame and exposure related status signals:

- Acquisition Trigger Wait
- Acquisition Active
- Frame Trigger Wait
- Frame Active
- Exposure Active

These status signals are used within the camera to control the camera timing. The current state of these signals can be read out by software. Furthermore it can be connected to an output line or LED through the I/O control block (see Chapter 7), which allows tracking the status from an external device. The timing of these signals are explained in the following sections.

4.2 Acquisition Control

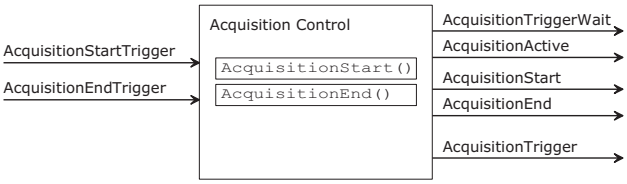

Figure 4.2: Acquisition Control Block

4.2.1 Acquisition Start and Stop Commands, Acquisition Mode and Acquisition Frame Count

The camera can only capture frames when the acquisition is started. The acquisition start command, which is executed by the software, starts the acquisition and prepares the camera to acquire frames. The acquisition is stopped, when the acquisition stop command is executed or - depending on the acquisition mode parameter - a certain number of frames is captured. Following acquisition mode parameters are available:

Acquisition Mode = Single Frame When the acquisition is started, the camera stops the acquisition automatically as soon as one frame has been captured. To capture another frame, the acquisition start command needs to be performed again.

Acquisition Mode = Multi Frame When the acquisition is started the camera stops the acquisition automatically after a certain number of frames, which are defined by acquisition frame count parameter, or when the acquisition stop command is executed.

Acquisition Mode = Continuous Frame When the acquisition is started the camera captures images continuously until the acquisition stop command is executed.

4.2.2 Acquisition Frame Rate and Acquisition Frame Rate Enable

With frame start trigger mode=off (see Section 4.3.1) and frame burst start trigger mode=off (see Section 4.3.2), and when exposure mode is set to "timed" (see Section 4.4.1), the camera generates frame start triggers internally according to the acquisition frame rate enable and acquisition frame rate configuration:

Acquisition Frame Rate Enable = off The camera runs in the "free-running" mode. It means frame start triggers are generated internally as soon as the camera is ready to start a new image capture. The frame rate is defined by the exposure time and the ROI settings (see Chapter 10).

Acquisition Frame Rate Enable = on The camera generates frame start triggers internally according to the acquisition frame rate configuration. See Chapter 10 for more information about the range of supported frame rates.

Fig. 4.3 shows the procedure of a capture of N frames. The modes of acquisition start trigger, frame start trigger and frame burst start trigger is set to off and the exposure mode is timed. Once an acquisition start command has been executed, the camera starts capturing frames until the acquisition stop command is received.

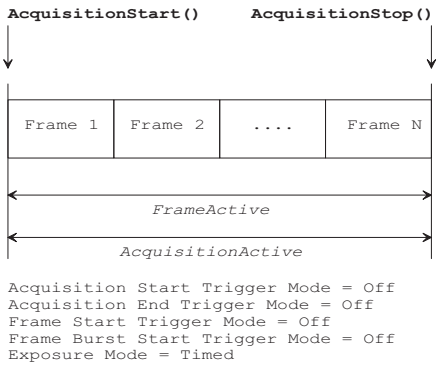

Figure 4.3: Free-running Image Capture, when Acquisition Start and End Trigger Mode is Off

4.2.3 Acquisition Start Trigger

The acquisition start trigger can be used to control the acquisition start procedure. The main property of this trigger is the trigger mode. It can be set to on or off:

Acquisition Start Trigger Mode = on As soon as the acquisition is started by executing of the acquisition start command, the camera goes into the state "Acquisition Trigger Wait". In this state, the camera can't start capturing images; it waits for an acquisition start trigger. As soon as the trigger has been received, the camera goes then into the state "Acquisition Active" and is ready to capture frames.

Acquisition Start Trigger Mode = off As soon as the acquisition is started by executing of the acquisition start command, the camera goes immediately into state "Acquisition Active" and is ready to capture frames.

Fig. 4.4 shows an example when the trigger mode of the acquisition start trigger is on. The acquisition status goes to acquisition trigger wait once an acquisition start command has been executed. As soon as an acquisition start trigger has been arrived, the acquisition status goes to acquisition active.

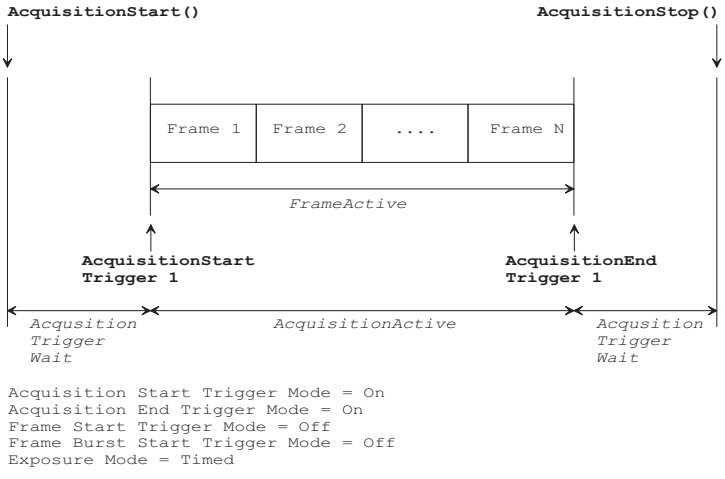

Figure 4.4: Free-running Image Capture, when Acquisition Start and End Trigger Mode is On

4.2.4 Acquisition End Trigger

The acquisition end trigger can be used to control the acquisition end procedure. The main property of this trigger is the trigger mode. It can be set to on or off:

Acquisition End Trigger Mode = on When the acquisition status is "Acquisition Active", it goes to "Acquisition Trigger Wait" as soon as an acquisition end trigger has been received. The camera stops capturing images and waits until an acquisition start trigger has been issued again.

Acquisition End Trigger Mode = off The acquisition end triggers are ignored and the acquisition status remains active until an acquisition stop command has been executed or the certain amount of frames has been captured, depending on the acquisition mode parameter (see Section 4.2.1)

4.2.5 Acquisition Control Output Signals

The acquisition control block has the following output signals:

Acquisition Trigger Wait An asserted acquisition trigger wait indicates, that the acquisition control is waiting for an acquisition start trigger (see Section 4.2.3).

Acquisition Active Acquisition active is a status signal, which is asserted, when the acquisition has been started and deasserted, when the acquisition is stopped.

Acquisition Start The acquisition start is an event, which is generated, when the acquisition is started.

Acquisition End The acquisition end is an event, which is generated, when the acquisition is stopped.

Acquisition Trigger The acquisition trigger is an event, which is generated, when the acquisition is started by the acquisition start trigger (see Section 4.2.3).

Acquisition trigger wait and acquisition active status signal are routed to the I/O control block and can there be selected for output on the physical output line or on one of the available leds (see Chapter 7). Acquisition start, acquisition end and acquisition trigger event can be used to trigger or to control other function in the camera, like counter or timer.

4.3 Frame Control

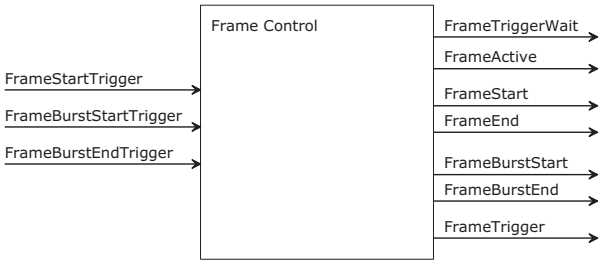

Figure 4.5: Frame Control Block

As soon as the acquisition is active the camera is ready to capture frames, which is controlled by the frame control block. The behaviour depends on the frame start trigger, frame burst start trigger and frame burst end trigger configuration.

4.3.1 Frame Start Trigger

The frame start trigger can be used to start a single frame capture. The main property of this trigger is the trigger mode. It can be set to on or off:

Frame Start Trigger Mode = on As soon as a frame start trigger has been received, a capture of one frame will be started and the frame status goes to "Frame Active". Once one frame has been processed, that camera status goes to "Frame Trigger Wait" again. The camera is ready to process frame start triggers, when the acquisition is active, showed by the "Acquisition Active" status, and when the "Frame Trigger Wait" status is asserted.

Frame Start Trigger Mode = off The frame start triggers are ignored.

The camera runs in free-running mode when the mode of both triggers, the frame start trigger and frame burst start trigger, is set to off and the exposure mode is set to "Timed" (see Section 4.4.1 for more information about the exposure mode).

Fig. 4.6 shows the procedure of a single frame capture started with a frame start trigger. The acquisition start trigger mode is off, so the camera waits for a frame start trigger once the acquisition command has been executed. Every receiving frame start trigger starts a capture of one single frame.

4.3.2 Frame Burst Start Trigger

The frame burst start trigger can be used to start a burst of frame capture. The main property of this trigger is the trigger mode. It can be set to on or off:

Frame Burst Start Trigger Mode = on As soon as a frame burst start trigger has been received, a capture of a burst of frames has been started and the frame status goes to "Frame Active". The number of frames is defined by the "Acquisition Burst Frame Count" value. The camera goes to "Frame Trigger Wait" again, when the configured number of burst frames has been captured. The camera is ready to process a frame burst start trigger, when the acquisition is active, showed by the "Acquisition Active" status, and when the "Frame Trigger Wait" status is asserted. The frame rate of a burst sequence is configured

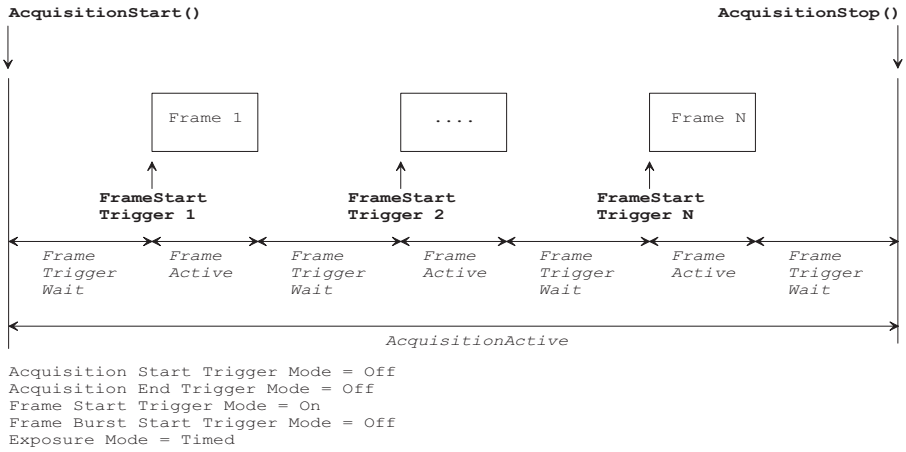

Figure 4.6: Triggered Image Acquisition of single Frames

by the acquisition frame rate value and the acquisition frame rate enable configuration (see Section 4.2.2 for more information)

Frame Burst Start Trigger Mode = off The frame burst start triggers are ignored. No capturing of burst of frames is started.

It is possible to set both, the mode of frame start trigger and frame burst start trigger, to on. In this case, the camera starts a single frame or a burst of frame capture, depending which trigger arrives first.

Fig. 4.7 shows the procedure of a burst of frames and a single frame capture. The Acquisition start and end trigger mode is on. So the camera waits for an acquisition trigger once the acquisition command has been executed. During this period any frame burst start or frame start triggers are ignored. As soon as an acquisition start trigger has been received, the camera waits for frame triggers. It can be a frame start trigger or a frame burst start trigger. Depending which trigger - frame start or frame burst start - arrives first, the camera starts a single frame or burst of frame acquisition.

4.3.3 Frame Burst End Trigger

The frame burst end trigger can be used to abort a current running burst capturing cycle. The main property of this trigger is the trigger mode. It can be set to on or off:

Frame Burst End Trigger Mode = on The frame burst end trigger is processed only, when burst acquisition cycle is active. Once this trigger has been received, it waits, until the current frame has been processed and then aborts the burst cycle. The camera status goes to "Frame Trigger Wait" again.

Frame Burst End Trigger Mode = off The frame burst end triggers are ignored.

The value "Acquisition Burst Frame Count" is ignored when the mode of the frame burst end trigger is set to on. It means, when a burst capture has been started, the camera captures frames until a frame burst end trigger arrives.

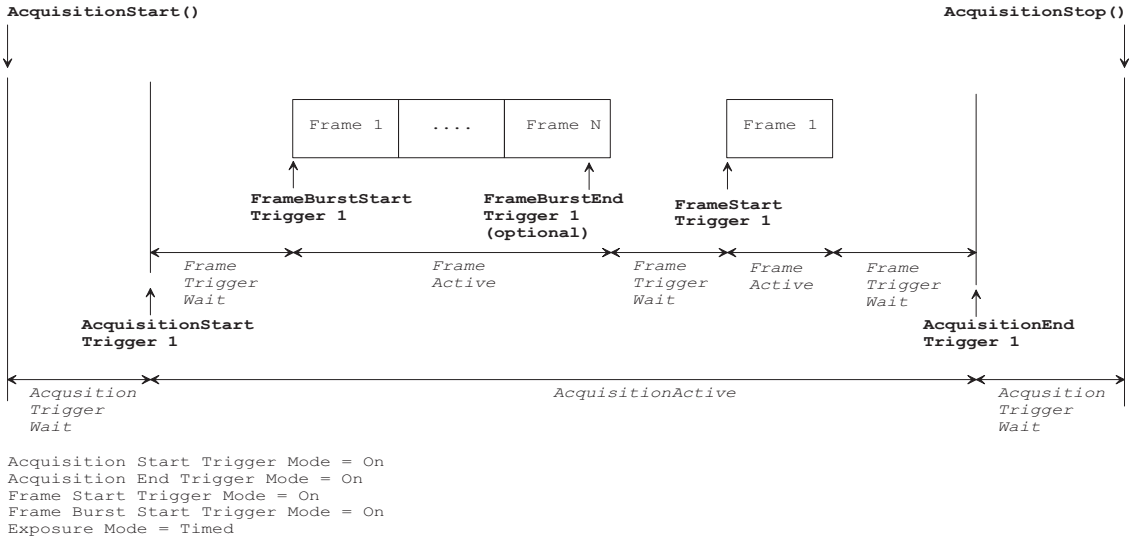

Figure 4.7: Triggered Acquisition of a Burst of Frame and of a single Frame

4.3.4 Frame Control Output Signals

The frame control block has the following output signals:

Frame Trigger Wait An asserted frame trigger wait indicates, that the frame control is waiting for a frame start trigger (see Section 4.3.1), frame burst start trigger (see Section 4.3.2) or an exposure start trigger (see Section 4.4.2).

Frame Active An asserted frame active signal indicates, that one or more frames are being captured.

Frame Start The frame start is an event, which is generated, when a new frame starts.

Frame End The frame end is an event, which is generated, when a frame is finished.

Frame Burst Start The frame burst start is an event, which is generated, when a new burst of frame starts.

Frame Burst End The frame burst end is an event, which is generated, when a burst of frame is finished.

Frame Trigger The frame trigger is an event, which is generated, when a frame is started by a frame start trigger (see Section 4.3.1), by a frame burst start trigger (see Section 4.3.2) or by an exposure start trigger (see Section 4.4.2).

Frame trigger wait and frame active status signal are routed to the I/O control block and can there be selected for output on the physical output line or on one of the available leds. Frame start, frame end and frame trigger event can be used to trigger or to control other function in the camera, like counter and timer.

4.4 Exposure Control

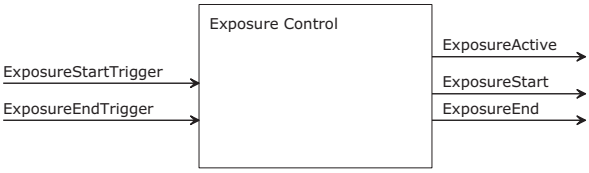

Figure 4.8: Exposure Control Block

A frame consists of an exposure cycle and an image read out. The exposure control block takes care of the exposure cycle. The camera has two modes of exposure time operations, which are defined by the exposure mode settings:

- Timed Exposure
- Trigger Controlled Exposure

4.4.1 Exposure Mode

The exposure mode configuration defines, if the exposure time is controlled by the exposure time registers or by the triggers. Following configurations are available:

Timed Exposure The exposure time is defined by the exposure time register. The value will determine the exposure time for each frame.

Trigger Controlled Exposure The exposure time is controller by exposure start and exposure end triggers (see Section 4.4.2 and Section 4.4.3 for more information).

4.4.2 Exposure Start Trigger

The exposure start trigger is used to start an exposure.

Exposure Start Trigger Mode = on As soon as a exposure start trigger has been received, the camera starts with the exposure cycle, which is showed by the "Exposure Active" status. The exposure remains until an exposure end trigger has been received (see Section 4.4.3). The camera is ready to process exposure start triggers, when the acquisition is active, showed by the "Acquisition Active" status, and when the "Frame Trigger Wait" status is asserted.

Exposure Start Trigger Mode = off The exposure start triggers are ignored.

The exposure start trigger is only available, when the exposure mode is set to "trigger controlled". The camera sets the trigger modes of this trigger automatically to on, when the exposure mode is set to "trigger controlled" and vice versa to off when the exposure mode is set to "timed".

4.4.3 Exposure End Trigger

The exposure end trigger is used to terminate an active exposure cycle.

Exposure End Trigger Mode = on An activated exposure cycle will be terminated and the image read out will be started, as soon as an exposure end trigger has been received. The "Exposure Active" status goes to inactive. Exposure end triggers are only processed, when an exposure start trigger has started a trigger controlled exposure cycle previously.

Exposure End Trigger Mode = off The exposure end triggers are ignored.

The exposure end trigger is only available, when the exposure mode is set to "trigger controlled". The camera sets the trigger modes of this trigger automatically to on, when the exposure mode is set to "trigger controlled" and vice versa to off when the exposure mode is set to "timed".

Fig. 4.9 shows procedure of a trigger controlled exposure mode. The Acquisition start trigger mode is off. The camera goes directly into status "Frame Trigger Wait" once the acquisition status has been executed. An exposure of a new frame is started as soon as an exposure start trigger has been received. The exposure ends with an exposure end trigger.

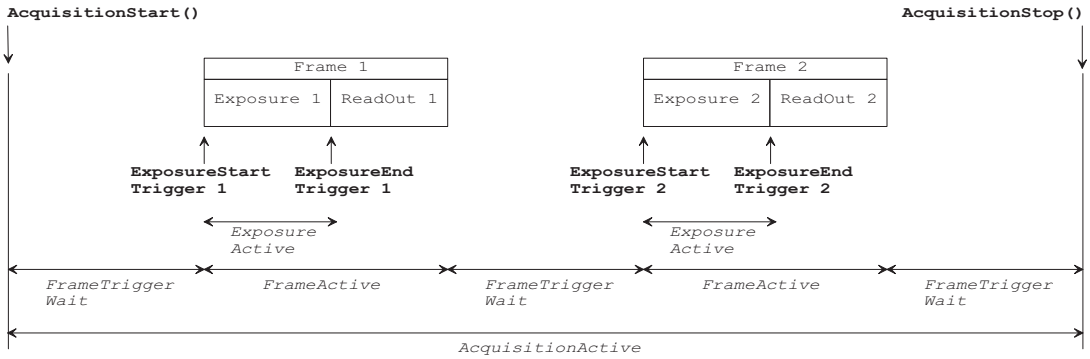


```
Acquisition Start Trigger Mode = Off
Acquisition End Trigger Mode = Off
Frame Start Trigger Mode = Off
Frame Burst Start Trigger Mode = Off
Exposure Mode = TriggerControlled
```

Figure 4.9: Trigger Controlled Exposure Mode

4.4.4 Exposure Control Output Signals

The frame control block has the following output signals:

Exposure Active An asserted exposure active signal indicates, that an exposure time of a current frame is active.

Exposure Start The exposure start is an event, which is generated, when a new exposure time has been started.

Exposure End The exposure end is an event, which is generated, when a currently running exposure time is finished.

Exposure active status signal is routed to the I/O control block and can there be selected for output on the physical output line or on one of the available leds. Exposure start and exposure end event can be used to trigger or to control other function in the camera, like acquisition, frame and exposure control or counter and timer.

4.5 Overlapped Image Acquisition Timing

The camera is able to perform an overlapped image acquisition. It means, a new exposure can be started during the image readout of the previous image. Fig. 4.10 shows an image acquisition procedure when images are captured in overlapped mode. The status "Frame Active" remains active during the acquisition of the three frames since there is no gap between two frames. The "Frame Trigger Wait" is asserted during the frame read out in order to indicate, that a new exposure can be started.

All examples in the previous sections show a non overlapping frame timing. A new frame is always started after the previous image read out has been finished. All these examples work also in the overlap mode. It doesn't show the overlap mode in order to simplify the diagrams.

The overlapped image acquisition is not available, when the triggered controlled exposure mode is configured.

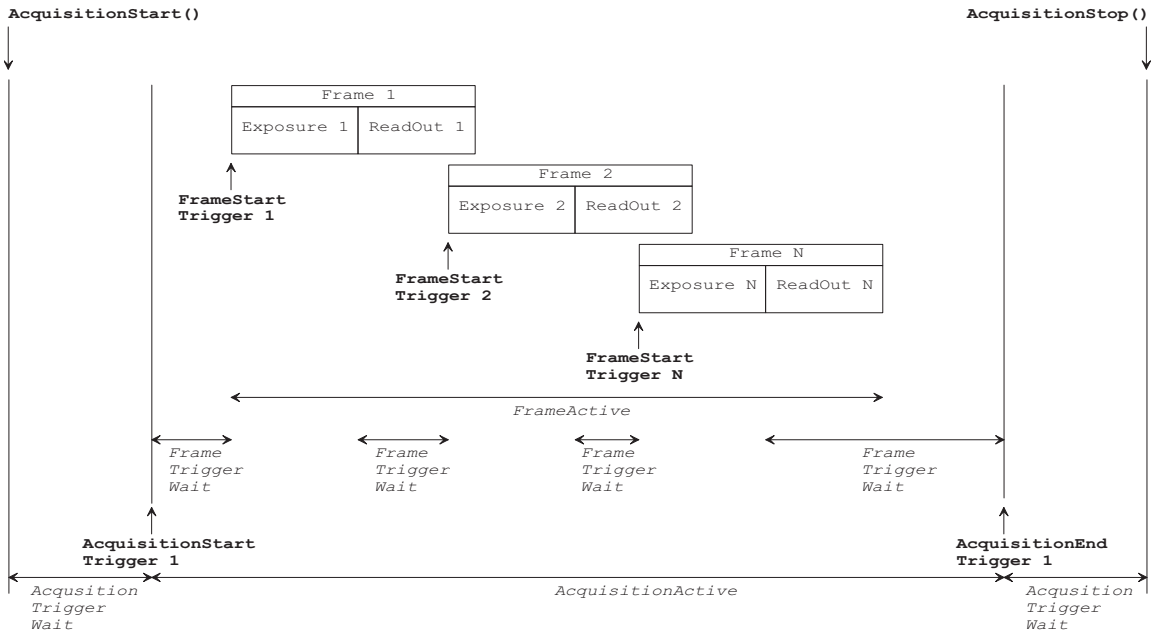

Figure 4.10: Overlapped Image acquisition Timing

There is a restriction of the overlapped image acquisition: The exposure time of the current frame must not end prior to the end of the read out of the previous frame. Two different timing situation needs to be distinguished:

Exposure Time > Read Out Time An new exposure cycle can be started as soon as the read out of the previous frame has been started (See Fig. 4.11).

Exposure Time < Read Out Time The start of a new exposure has to be delayed by a certain amount of time in order to ensure, that the exposure doesn't end prior to the image read out end of the previous frame (See Fig. 4.12).

The camera adjusts the timing automatically, and ensures that it complies with this restriction. Frame start or frame burst start triggers which arrive too early and which violates the overlapping restriction, will be ignored by the camera and indicated by a missed trigger event,

which can be counted by a counter (see Section 5.1.5 for more information how to count missed triggers). Fig. 4.11 and Fig. 4.12 shows both timing situations, when the exposure time longer than the read out time and when the exposure time is shorter than the read out time.

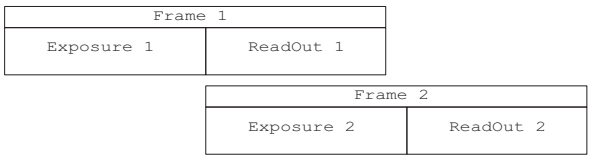

Figure 4.11: Overlapped Image acquisition when exposure time > read out time

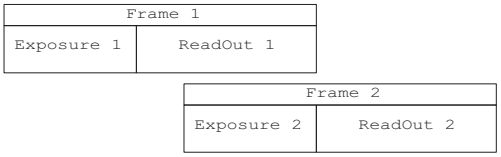

Figure 4.12: Overlapped Image acquisition when exposure time < read out time

4.6 Acquisition-, Frame- and Exposure-Trigger Configuration

The acquisition-, frame- and exposure timing can be controlled by 7 triggers:

- Acquisition Start Trigger
- Acquisition End Trigger
- Frame Start Trigger
- Frame Burst Start Trigger
- Frame Burst End Trigger
- Exposure Start Trigger
- Exposure End Trigger

Fig. 4.13 shows the signal path which is available for every of the 7 triggers. It contains:

- Trigger Source Selection
- Trigger Software
- Trigger Mode
- Trigger Activation
- Trigger Divider
- Trigger Delay

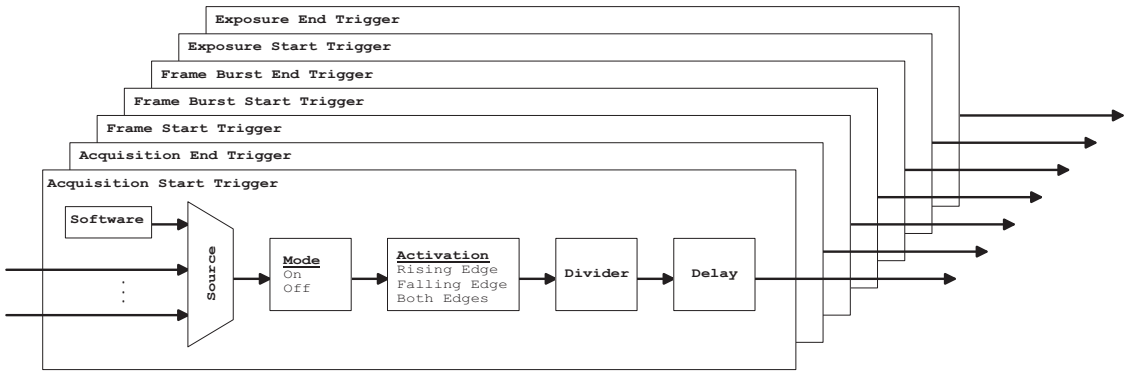

Figure 4.13: Trigger Path

4.6.1 Trigger Source Selection

The user can select the source which is used to generate the corresponding trigger. The source can come from an external line input, internal pulse generated by a counter or timer or a pulse, which is generated by software. The following list shows the signal sources, which are available:

Line In A trigger is generated by a line input signal. The activation configuration defines, if the rising edge, the falling edge or both edges are taken into account (see Section 4.6.4).

Software A trigger is generated by the locally trigger software command register (see Section 4.6.2 for more information).

Software Signal Pulse A trigger is generated by the software signal pulse, which comes from a common software signal pulse register (see Section 4.7 for more information).

Counter Start A trigger signal is generated by the counter start event (see Section 5.1.3 for more information about the counter start event).

Counter End A trigger signal is generated by the counter end event (see Section 5.1.3 for more information about the counter end event).

Timer Start A trigger signal is generated by the timer start event (see Section 5.2.3 for more information about the timer start event).

Timer End A trigger signal is generated by the timer end event (see Section 5.2.3 for more information about the timer end event).

Encoder A trigger signal is generated by the encoder (see Chapter 6 for more information about the encoder).

Action A trigger signal is generated by the action control block (see Chapter 8 for more information about the action control).

4.6.2 Trigger Software

The trigger software is a software command register, which is available in the signal path of each trigger. Accessing to this register generates an internal trigger, which will be processed in the signal path.

Trigger source must be set to software in order that a trigger software command will be processed.

4.6.3 Trigger Mode

The trigger mode defines, if the trigger is active. Following settings are available:

- On
- Off

4.6.4 Trigger Activation

The trigger activation defines, which edge of the selected trigger is processed in the trigger signal path. Following configuration is available:

- Rising Edge
- Falling Edge
- Both Edges

The trigger activation configuration is only available, when the trigger source is set to Line In.

4.6.5 Trigger Divider

The trigger divider specifies a division factor of the incoming trigger pulses. A division factor of 1 processes every incoming trigger. A division factor of 2 processes every second trigger and so on.

4.6.6 Trigger Delay

The trigger delay lets the user specify a delay, that will be applied between the reception of a trigger event and when the trigger becomes active.

4.7 Software Signal Pulse and User Output

The software signal pulse block contains eight general purpose registers which allow generating internal pulse signals by software access. These pulse signals are internally connected to following functions, where it can be used to start a procedure:

- Acquisition Start Trigger
- Acquisition End Trigger
- Frame Start Trigger
- Frame Burst Start Trigger
- Frame Burst End Trigger
- Exposure Start Trigger
- Exposure End Trigger
- Counter Trigger
- Counter Event
- Encoder Reset
- Counter Reset
- Timer Trigger

The user output block is an eight bit status register. The bits can be set to 0 or 1 by software. The bits are available in the following firmware blocks/functions:

- Counter Trigger
- Counter Reset
- Encoder Reset
- LED S0, S1 and S2
- Line Out

5

Counter & Timer

5.1 Counter

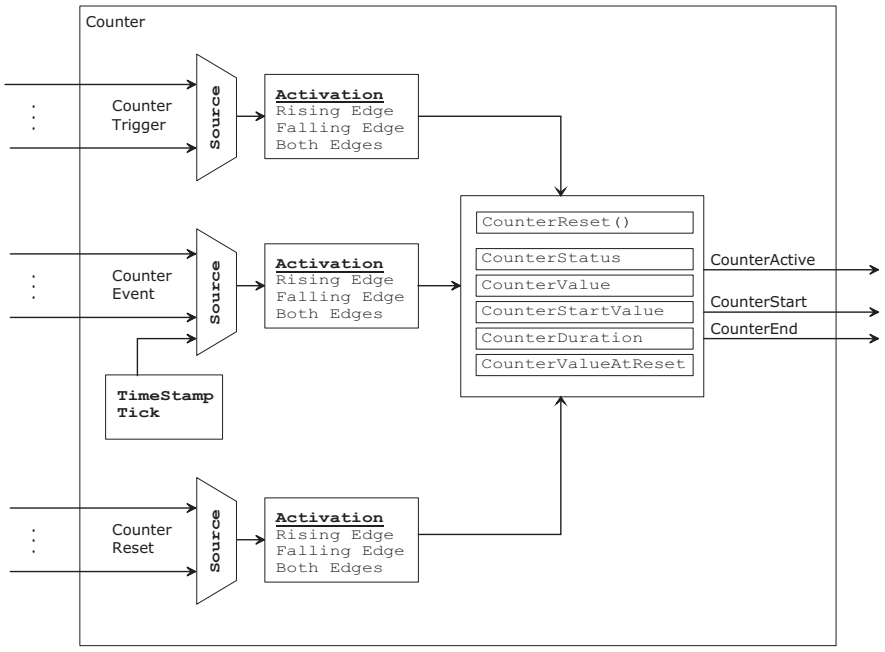

Figure 5.1: Counter Structure

Four general purpose counters are available (Counter0 . . . Counter3) which are used for counting events. Each counter can be individually configured by software and controlled by counter trigger, counter event and counter reset signals. This section describes the configuration and the function of the counters.

Fig. 5.1 shows the structure of one counter. Along with the counter function itself it contains a counter trigger source, a counter event source and a counter reset source selection and activation block. Furthermore there is a counter active status signal, which is available in the I/O control block (see Chapter 7). And the counter generates counter start and counter end events, which can be used to trigger other blocks, like counter, timer, acquisition, frame or exposure control.

5.1.1 Counter Usage

In a basic usage, at least a counter event source needs to be selected (see Section 5.1.5 for more information about the counter event source selection). Once an event source has been selected, the counter needs to be reset in order to start the counter. When started it counts from a defined start value, which is configurable by the CounterStartValue property, and ends counting events after a certain number of events, which is configurable by the CounterDuration property.

If additionally a trigger source is selected, the counter is waiting for a trigger. It ignores counter events until a valid trigger event has been received. A valid trigger signal on the selected trigger source starts the counter, which means, that it counts the predefined number of events from the start value according to the counter start value and duration configuration.

The current counter value is readable by the property CounterValue.

5.1.2 Counter Status

The counter has different states, which depends on the configuration and usage. The current state can be read out by the register CounterStatus. The following list shows the available states:

Counter Idle Counter is idle, and doesn't count any events.

Counter Trigger Wait As soon as a counter trigger source is selected (counter trigger source $\neq$ OFF), the counter goes into the counter trigger wait state and waits for a trigger signal on the selected source. In this state, the counter does not count any events.

Counter Active Counter is active and is ready to count every event. The counter can be temporarely stopped by setting the counter event source to OFF .

Counter Completed Counter has stopped as it reached its programmed duration.

Counter Overflow Counter has reached its counter limit, which is 2^32-1, and an additional counter event signal has been received. Once the counter is in the state overflow, it has to be reset by software or by counter reset signal in order to recover it from this state.

5.1.3 Counter Active, -Start and -End Signal

Each counter has the following output signals:

Counter Active An asserted counter active signal indicates, that the counter is active and is counting events. The counter active signal is internally routed to the I/O control block and can there be selected for output on the physical output line or on one of the available leds.

Counter Start The counter start is an event, which is generated, when the counter goes into the counter active state or is restarted during counter active period.

Counter End The counter end is an event, which is generated, when the counter arrives its configured end condition; and changes to the state counter completed.

The counter start and end event can be used to trigger or to control other function in the camera, like acquisition, frame and exposure control or counter and timer. It can also be used to cascade counters in order to get a bigger counting range.

5.1.4 Counter Reset

There are two ways how to reset a counter: Either by a software reset command or by a hardware reset source signal. The reset behaviour depends on the current counter event and trigger source configuration:

Counter Trigger Source = Off and Counter Event Source = Off The state of the counter changes to "idle".

Counter Trigger Source = Off and Counter Event Source $\neq$ Off The state of the counter changes to "active".

Counter Trigger Source $\neq$ Off The state of the counter changes to "trigger wait".

The counter reset source can be set to the counter end signal of the same counter. This allows to restart the counter automatically as soon as it arrives its end condition.

The current counter value at the time, when the reset is performed, is stored to the CounterValueAtReset property, which can be read out by software.

5.1.5 Counter Event Source

The counter event source selects the signal event, which will be the used to increment the counter. The following signal sources are available:

Off Counter is idle or has been stopped temporarely and doesn't count any events.

Acquisition Trigger Counts the number of acquisition triggers.

Acquisition Start Counts the number of acquisition start events.

Acquisition End Counts the number of acquisition end events.

FrameTrigger Counts the number of frame triggers.

Frame Start Counts the number of frame start events.

Frame End Counts the number of frame end events.

Frame Burst Start Counts the number of frame burst start events.

Frame Burst End Counts the number of frame burst end events.

Exposure Start Counts the number of exposure start events.

Exposure End Counts the number of exposure end events.

Counter 0 ... 3 Start Counts the number of the chosen counter start events.

Counter 0 ... 3 End Counts the number of the chosen counter end events.

Timer 0 ... 3 Start Counts the number of the chosen timer start events.

Timer 0 ... 3 End Counts the number of the chosen timer end events.

Encoder Counts the number of the encoder trigger events.

Action 0 ... 3 Counts the number of the chosen action signal events.

Software Signal Pulse 0 ... 7 Counts the number of the chosen software signal pulse events (see Section 4.7).

Line Input Counts the number of transitions on the line input according to the signal input activation configuration.

MissedAcqStartTrigger Count the number of missed acquisition start triggers. A missed acquisition start trigger event is generated, when a acquisition start trigger cannot be processed.

MissedFrameStartTrigger Count the number of missed frame start triggers. A missed frame start trigger event is generated, when a frame start trigger cannot be processed.

MissedFrameBurstStartTrigger Count the number of missed frame burst start triggers. A missed frame burst start trigger event is generated, when a frame burst start trigger cannot be processed.

MissedExposureStartTrigger Count the number of missed exposure start triggers. A missed exposure start trigger event is generated, when an exposure start trigger cannot be processed.

Missed Trigger Counts the number of any generated missed triggers. The missed trigger is the logical OR connection of MissedAcqStartTrigger, MissedFrameStartTrigger, MissedFrameBurstStartTrigger and MissedExposureStartTrigger.

Time Stamp Tick Counts the number of time stamp ticks. A time stamp tick generator is available for every counter. It generates events with a rate, which can be configured. For instances if the rate is set to 1 us and the counter event source is set to count time stamp ticks, the counter increments every 1 us.

Line input source has additionally an activation configuration, which needs to be set accordingly. Following configuration values are available:

Rising Edge Counter counts rising edges on the selected line input.

Falling Edge Counter counts falling edges on the selected line input

Both Edges Counter counts both edges on the selected line input

Activation configuration has only effect when line input is selected as a counter event source, otherwise this configuration is ignored.

The counter can be temporarely switched off, if the counter event source is set to off. It continue counting events as soon as counter event source has been selected again.

5.1.6 Counter Trigger Source

The counter trigger source selects the signal which will be used to start the counter. The following signals sources are available:

Off Disables the counter trigger.

Acquisition Trigger Starts with the reception of the acquisition trigger event.

Acquisition Start Starts with the reception of the acquisition start event.

Acquisition End Starts with the reception of the acquisition end event.

FrameTrigger Starts with the reception of the frame trigger event.

Frame Start Starts with the reception of the frame start event.

Frame End Starts with the reception of the frame end event.

Frame Burst Start Starts with the reception of the frame burst start event.

Frame Burst End Starts with the reception of the frame burst end event.

Exposure Start Starts with the reception of the exposure start event.

Exposure End Starts with the reception of the exposure end event.

User Output 0 ... 7 Starts and counts events as long as the selected user output bit is asserted. When the counter is started, it ignores counter events as long as the corresponding user output bit is deasserted (see Section 4.7).

Counter 0 ... 3 Start Starts with the reception of the chosen counter start event.

Counter 0 ... 3 End Starts with the reception of the chosen counter end event.

Timer 0 ... 3 Start Starts with the reception of the chosen timer start event.

Timer 0 ... 3 End Starts with the reception of the chosen timer end event.

Encoder Starts with the reception of the encoder trigger event.

Action 0 ... 3 Starts with the receiption of the chosen action signal event.

Software Signal Pulse 0 ... 7 Starts with the reception of chosen software signal pulse event (see Section 4.7).

Line Input Starts when the specified counter trigger activation condition is met on the chosen line.

Line input source has additionally an activation configuration, which needs to be set accordingly. Following configuration values are available:

Rising Edge Counter starts with the rising edge on the selected line input.

Falling Edge Counter starts with the falling edge on the selected line input.

Both Edges Counter starts with any edge on the selected line input.

Level High Counter starts and is counting events as long as the level is high. When the counter is started, it ignores counter events as long as the corresponding line input is low.

Level Low Counter starts and is counting events as long as the level is low. When the counter is started, it ignores counter events as long as the corresponding line input is high.

Activation configuration has only effect when line input is selected as a counter trigger source, otherwise this configuration is ignored.

5.1.7 Counter Reset Source

The counter reset source selects the signal which will be the used to reset the counter. The following signals sources are available:

Off Disables the counter reset.

Counter Trigger Resets with the reception of a trigger on the counter trigger source (see Section 5.1.6).

Acquisition Trigger Resets with the reception of the acquisition trigger.

Acquisition Start Resets with the reception of the acquisition start event.

Acquisition End Resets with the reception of the acquisition end event.

FrameTrigger Resets with the reception of the frame trigger.

Frame Start Resets with the reception of the frame start event.

Frame End Resets with the reception of the frame end event.

Frame Burst Start Resets with the reception of the frame burst start event.

Frame Burst End Resets with the reception of the frame burst end event.

Exposure Start Resets with the reception of the exposure start event.

Exposure End Resets with the reception of the exposure end event.

User Output 0 ... 7 Resets the counter as long as the selected user output bit is asserted. The counter remains in reset state until the selected user output bit is deasserted again (see Section 4.7).

Counter 0 ... 3 Start Resets with the reception of the chosen counter start event.

Counter 0 ... 3 End Resets with the reception of the chosen counter end event.

Timer 0 ... 3 Start Resets with the reception of the chosen timer start event.

Timer 0 ... 3 End Resets with the reception of the chosen timer end event.

Encoder Resets with the reception the encoder trigger event.

Action 0 ... 3 Resets with the reception of the chosen action signal event.

Software Signal Pulse 0 ... 7 Resets with the reception of chosen software signal pulse event (see Section 4.7).

Line Input Resets when the specified counter trigger activation condition is met on the chosen line.

Line input source has additionally a activation configuration, which needs to be set accordingly. Following configuration values are available:

Rising Edge Resets with the rising edge on the selected line input.

Falling Edge Resets with the falling edge on the selected line input.

Both Edges Resets with any edge on the selected line input.

Activation configuration has only effect when line input is selected as a counter reset source, otherwise this configuration is ignored.

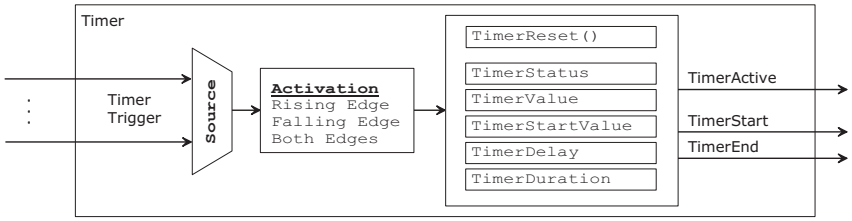

Figure 5.2: Timer Structure

5.2 Timer

Four general purpose timers are available in the camera (Timer0 ... Timer3). A timer can be used to generate a timed pulse - for instances a strobe signal - or to generate an event after a predetermined duration. Each timer can be configured individually by software and controlled by timer trigger events. This section describes the configuration and the function of the timers.

Fig. 5.2 shows the structure of one timer. It contains a timer trigger source and activation block. Furthermore it has three output signals: A timer active status signal, which is routed to the I/O control block (see Chapter 7) and timer start and end event signals, which can be used to trigger other blocks, like counter, timer, acquisition, frame or exposure control (see Section 5.2.3).

5.2.1 Timer Usage

Timer delay and timer duration value needs to be configured accordingly. When a timer trigger source is selected the timer is waiting for a trigger signal. Once this trigger signal has been received, the timer starts first with the timer delay period, if the timer delay value is > 0, and counts then for the specified timer duration.

When the timer trigger source is set to off (see Section 5.2.5), a software timer reset command starts the timer immediately (see Section 5.2.4).

The current timer value can be read via software. A start value can also be set, which means, that the timer starts from this configured value instead from zero.

5.2.2 Timer Status

The timer has different states, which depends on the configuration and usage. The current state can be read out by the register TimerStatus. The following list shows the available states:

Timer Idle Timer is idle, and trigger source selection is set to off.

Timer Trigger Wait Timer is waiting for a timer trigger signal.

Timer Delay Timer is in timer delay count period.

Timer Active Time is active and counts for the specified timer duration.

Timer Completed Timer completed indicates, that the timer reached the timer duration count. The timer remains in this state, until a new timer trigger event has been received, or the timer is reset by a software command (see Section 5.2.4)

5.2.3 Timer Active, -Start and -End Signal

Timer Active An asserted timer active signal indicates, that the timer has started counting the configured duration period. The timer active signal is internally routed to the I/O control block and can there be selected for output on the physical output line or on one of the available leds.

Timer Start The timer start is an event, which is generated, when the timer starts with the timer duration period.

Timer End The timer end is an event, which is generated, when the timer arrives its configured timer duration value.

The timer start and end event signals can be used to trigger other blocks, like counter, timer, acquisition, frame or exposure control.

5.2.4 Timer Reset

The timer can be reset by a software command. It performs a software reset of the timer counter and starts the timer immediately (change to state timer active), when trigger source is set to off; otherwise it goes into the state timer trigger wait.

5.2.5 Timer Trigger Source

The timer trigger source selects the events that will be the used to reset and to start the timer. The following list of signals are available:

Off Disables the timer trigger.

Acquisition Trigger Starts with the reception of the acquisition trigger event.

Acquisition Start Starts with the reception of the acquisition start event.

Acquisition End Starts with the reception of the acquisition end event.

FrameTrigger Starts with the reception of the frame trigger event.

Frame Start Starts with the reception of the frame start event.

Frame End Starts with the reception of the frame end event.

Frame Burst Start Starts with the reception of the frame burst start event.

Frame Burst End Starts with the reception of the frame burst end event.

Exposure Start Starts with the reception of the exposure start event.

Exposure End Starts with the reception of the exposure end event.

User Output 0 ... 7 Starts when the selected user output bit is set to 1.

Counter 0 ... 3 Start Starts with the reception of the chosen counter start event.

Counter 0 ... 3 End Starts with the reception of the chosen counter end event.

Timer 0 ... 3 Start Starts with the reception of the chosen timer start event.

Timer 0 ... 3 End Starts with the reception of the chosen timer end event.

Encoder Starts with the reception of the encoder trigger event.

Action 0 ... 3 Starts with the reception of the chosen action signal event.

Software Signal Pulse 0 ... 7 Starts with the reception of chosen software signal pulse event (see Section 4.7).

Line Input Starts when the specified counter trigger activation condition is met on the chosen line.

Line input source has additionally a activation configuration, which needs to be set accordingly. Following configuration values are available:

Rising Edge Timer starts with the rising edge on the selected line input.

Falling Edge Timer starts with the falling edge on the selected line input.

Both Edges Timer starts with any edge on the selected line input.

A self re-trigger timer can be configured, when the trigger source is set to its own timer end event. The timer needs a software reset in order to start the self re-trigger mode.

6

Encoder

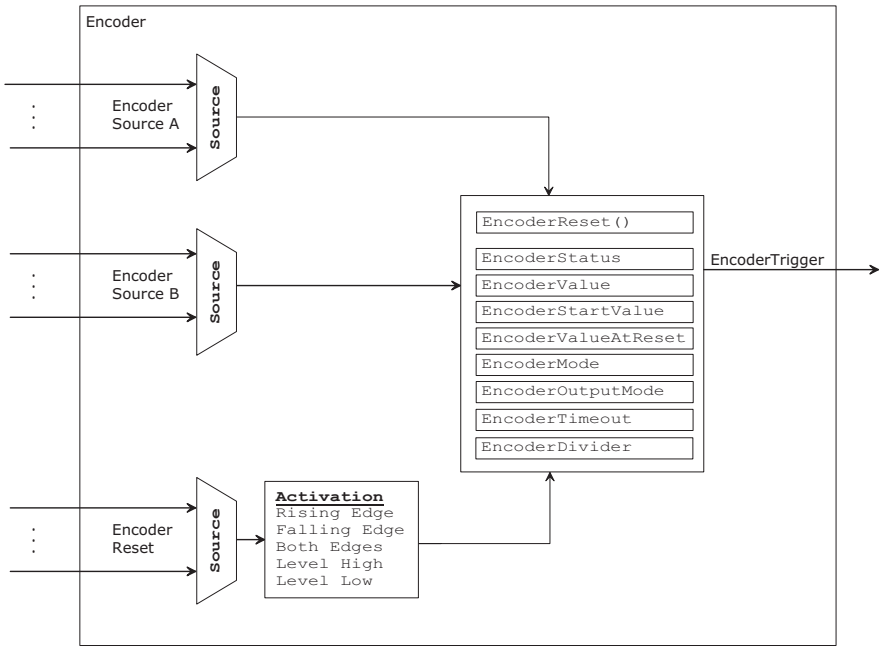

Figure 6.1: Encoder Structure

An incremental encoder with A/B outputs can be used to synchronize the camera triggers to the speed of a conveyor belt. These A/B outputs can be directly connected to the camera and appropriate triggers are generated inside the camera with the help of the encoder block. See Section 13.6.2 for more information, how to connect an encoder interface to the camera.

Fig. 8.1 shows the structure of the encoder. The trigger sources for the A and B inputs can be mapped to any of the line inputs of the camera, while the reset source can also be mapped to a multitude of other triggers. The encoder signals are used to track the position of the target using a counter. The block generates trigger signals based on the input, these can be used to trigger other blocks, like counter, timer, acquisition, frame or exposure control.

6.1 Encoder Usage

In order to enable the encoder, both trigger sources A and B need to be mapped to an input line. The encoder then starts tracking the position as soon as it is reset. Depending on the EncoderMode, the position counter reacts to either every input signal transition (HighResolution mode) or only to every full cycle of state transitions (FourPhase mode), see Fig. 6.2.
A start position can be configured through the EncoderStartValue property, the current position can be read through the EncoderValue property. Whenever the encoder is reset via input signal or software command, the current encoder value gets stored in the EncoderValueAtReset property.

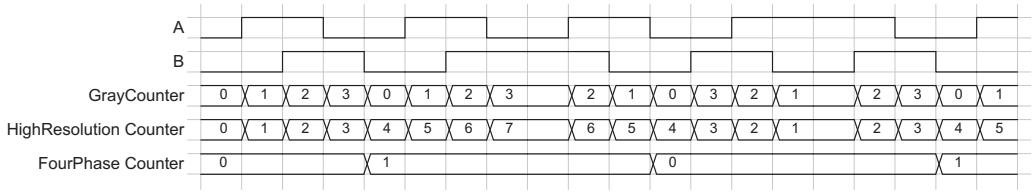

Figure 6.2: Encoder Modes

6.2 Encoder trigger output

The trigger output of the encoder reacts to changes of the position counter. Triggers are generated according to the EncoderOutputMode property:

Off Disables the encoder output trigger.

PositionUp Triggers are generated whenever the position counter increments and the position value has not previously been reached.

PositionDown Triggers are generated whenever the position counter decrements and the position value has not previously been reached.

DirectionUp Triggers are generated whenever the position counter increments.

DirectionDown Triggers are generated whenever the position counter decrements.

Motion Triggers are generated whenever the position counter value changes.

In order to keep track of the highest respectively lowest position in the PostionUp and -Down modes, a watermark counter is used. The counter resets whenever the output mode changes, the encoder is reset or a new start value is written. See Fig. 6.3 for a comparison of the modes. The number of generated output triggers can be reduced by setting the EncoderDivider

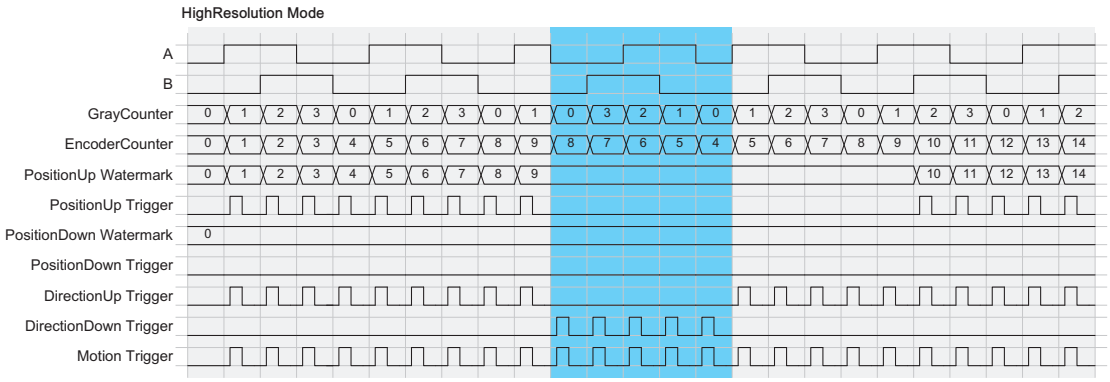

Figure 6.3: Encoder Output Modes

property accordingly. This property only affects the trigger output, the position is tracked exactly the same independent of the divider value.

6.3 Encoder Status

The encoder has different states which reflect on the A/B input signals. The current state can be read out by the EncoderStatus register. The following list shows the available states:

Encoder Idle Encoder is idle, either no trigger sources are configured or the encoder is waiting on the reset.

Encoder Up The position counter last incremented.

Encoder Down The position counter last decremented.

Encoder Static The position counter hasn't changed in the EncoderTimeout period. The encoder also switches to this state when it is reset while in the idle state.

The EncoderTimeout is configurable by the user. If set to zero, no timeout is applied and the encoder simply stays in the Up respectively Down state until the direction reverses. The EncoderTimeout property only affects the encoder status.

6.4 Encoder Reset Source

The encoder reset source selects the signal which will be the used to reset the encoder. The following signals sources are available:

Off Disables the encoder reset.

Acquisition Trigger Resets with the reception of the acquisition trigger.

Acquisition Start Resets with the reception of the acquisition start event.

Acquisition End Resets with the reception of the acquisition end event.

FrameTrigger Resets with the reception of the frame trigger.

Frame Start Resets with the reception of the frame start event.

Frame End Resets with the reception of the frame end event.

Frame Burst Start Resets with the reception of the frame burst start event.

Frame Burst End Resets with the reception of the frame burst end event.

Exposure Start Resets with the reception of the exposure start event.

Exposure End Resets with the reception of the exposure end event.

User Output 0 ... 7 Resets the encoder as long as the selected user output bit is asserted. The encoder remains in reset state until the selected user output bit is deasserted again (see Section 4.7).

Counter 0 ... 3 Start Resets with the reception the chosen counter start event.

Counter 0 ... 3 End Resets with the reception the chosen counter end event.

Timer 0 ... 3 Start Resets with the reception the chosen timer start event.

Timer 0 ... 3 End Resets with the reception the chosen timer end event.

Software Signal Pulse 0 ... 7 Resets with the reception of chosen software signal pulse event (see Section 4.7).

Line Input Resets when the specified encoder trigger activation condition is met on the chosen line.

Line input source has additionally a activation configuration, which needs to be set accordingly. Following configuration values are available:

Rising Edge Encoder starts with the rising edge on the selected line input.

Falling Edge Encoder starts with the falling edge on the selected line input

Both Edges Encoder starts with any edge on the selected line input

Level High Resets the encoder as long as the level is high. The encoder remains in reset state until the level is low again.

Level Low Resets the encoder as long as the level is low. The encoder remains in reset state until the level is high again.

Activation configuration has only effect when line input is selected as an encoder reset source, otherwise this configuration is ignored.

7

I/O Control

This chapter shows the structure of the physical input and physical output line. It describes the signal path and how to configure it.

The I/O control block contains a signal input path and a signal output path.

7.1 Input Signal Path

The camera has two physical signal input lines, which come from the input opto-isolator of the camera hardware interface (see Section 13.6) and which is fed into the input signal path of the camera. Fig. 7.1 shows the structure of the input signal path. The user can invert this signal and its current status can be read by software.

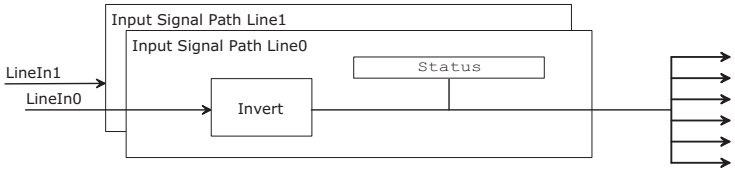

Figure 7.1: Input Signal Path

The output of the signal input path is distributed to following camera function:

- Acquisition Start Trigger
- Acquisition End Trigger
- Frame Start Trigger
- Frame Burst Start Trigger
- Frame Burst End Trigger
- Exposure Start Trigger
- Exposure End Trigger
- Counter Trigger
- Counter Event
- Counter Reset
- Encoder Reset
- Timer Trigger
- Line Out
- LED S0, S1 or S2

7.2 Output Signal Path

The camera has one physical signal output line and three LEDs (S0, S1 & S2), which can be configured according to the need of the application. The physical output line is connected to the output opto-isolator in the camera hardware interface (see Section 13.6). The output line, LED0, LED1 and LED2 have its own output signal path which is shown in Fig. 7.2. The source can be selected and the selected signal can be inverted before it is sent out of the camera. Furthermore the current status of the output signal can read by software.

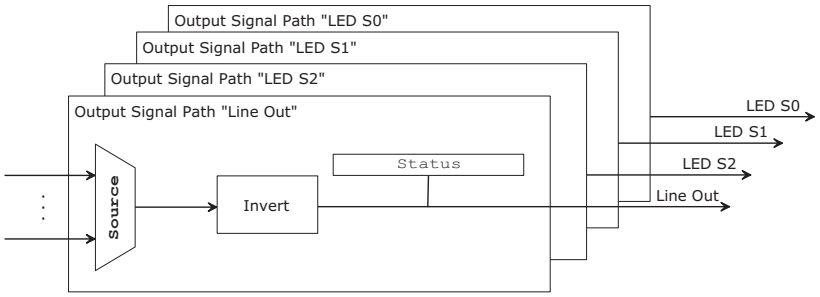

Figure 7.2: Output Signal Path

Following signals are available and can be selected for the output:

- Input Line
- Counter Active Status
- Timer Active Status
- User Output
- Acquisition Trigger Wait Status
- Acquisition Active Status
- Frame Trigger Wait Status
- Frame Active Status
- Exposure Active Status
- Frame Valid Status
- Line Valid Status
- Heartbeat
- Serial Communication
- Constant 0 Value
- Constant 1 Value

If the source heartbeat is selected, the led shows a pulsating behaviour, when the camera is idle (no image capturing is active). It means, the intensity starts from dark and goes slowly to bright and slowly to dark again. Every time, when the camera is acquiring and sending images, the LED changes to a blinking characteristic.

If the source serial communication is selected, the led flashes every time when the host communicates with the camera, due to changing or reading of camera parameters.

8

Action Control

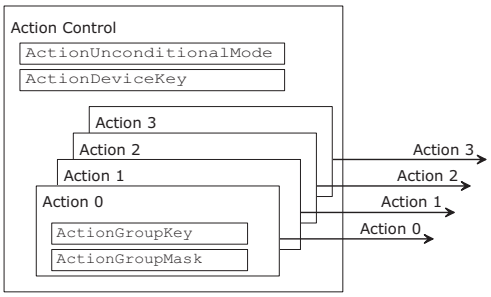

Figure 8.1: Action Control Structure

Action signals are a method to send triggers to multiple cameras in a common network at the same time. Four action signals are available in the Photonfocus GigE cameras. Each of them can be used as a trigger for the image acquisition, counter and/or timer. The commands are sent via the transport layer as a broadcast protocol message. The configuration parameters ActionDeviceKey, ActionGroupKey and ActionGroupMask in the camera allow filtering of these broadcast messages: The corresponding action signal is only asserted, when the received broadcast message matches to its key and mask configuration.

The action command enables triggering of the camera with low latency and low jitter.

8.1 Action Command Usage

Each action command message comes with the following key and mask information, which is necessary to validate the requested action signal:

ActionUnconditionalMode Enables the unconditional action command mode where action commands are processed even when the primary control channel is closed.

ActionDeviceKey The ActionDeviceKey authorize the action in the camera. The camera reacts only, when the received action message includes the correct action device key value. In the camera ActionDeviceKey value is configured once and applied globally to all four action signals..

ActionGroupKey The ActionGroupKey defines a group of devices on which the action has to be executed. This enables an action command to be applied to a specific subset of devices. Each action signal has its own group key, which need to be defined in the camera.

ActionGroupMask The ActionGroupMask filters out some of the devices of the group, which are selected by the action group key. Each action signal has its own group mask, which need to be defined in the camera.

The corresponding action signal is only asserted if:

- the configured ActionDeviceKey is equal to the action device key in the message.
- the configured ActionGroupKey is equal to the action group key in the message.
- the logical AND-wise operation of the action group mask in the message against the selected ActionGroupMask is non-zero.

8.2 Action Control Output

The action output signals can be used to trigger other blocks, like counter, timer, acquisition, frame or exposure control.

9

Image Format Control

The focus on the interesting parts of an image can be set by setting the region of interest (ROI) (see Section 9.1).

The ROI influences the image size which leads into an increased frame rate (see Chapter 10 for more information about the available frame rate).

9.1 Region of Interest (ROI)

Some applications do not need full image resolution. The image size can be reduced by setting the horizontal image offset (Offset X) and the image width (Width) and by setting the vertical image offset (OffsetY) and image height (Height). A region of interest can be almost any rectangular window but it must be placed within the sensor area. OffsetX + Width must not exceed the sensor width and OffsetY + Height must not exceed sensor height.

The ROI OffsetX and Width must be a multiple of 32.

In 3Donly and 2D&3D mode, the minimum image height is 11.

10 Frame Rate

The frame rate depends on the image size, the used exposure time, the max data rate of the GigE interface (MaxDataRateInterface) and the maximum framerate of the sensor. The image size can be configured by the ROI settings (see Chapter 9).

Three different timing situations have to be considered:

- Exposure time is dominant
- Image size is dominant and limited by interface
- Image size is dominant and limited by sensor

Depending on the timing situation the frame rate is calculated according to the formula in Section 10.1, Section 10.2 or Section 10.3. In order to find out what is dominant, all timing situation need to be calculated and the lowest value defines the maximum frame rate.

10.1 Exposure time is dominant

The frame rate is given by the configured exposure time. The maximal frame rate is in this case:

FrameRate = (1 / (ExposureTime + FramePause))

FramePause is 75 μs (PYTHON1300) resp. 139 μs (PYTHON2000) in 2DOnly mode and 61 μs (PYTHON1300) resp. 81 μs (PYTHON2000) in 3DOnly mode.

10.2 Image size is dominant and limited by interface

The fame rate is given by the configured image size and 2D/3D mode setting. Generally, the interface is the limiting factor in 2Donly and 2D&3D mode. The maximal frame rate in this case is given by the max data rate of the GigE interface:

FrameRate = MaxDataRateInterface / (OutputWidthMax x OutputHeightMax x 8 bits)

This formula can be applied to both 3D and 2D modes; in 3D mode, the output height is either 2 or 4 depending on the 3D DataFormat. In 2D&3D mode, the output height is 2 or 4 larger than the ROI configured in the sensor (for more information see Section 11.5.6).

10.3 Image size is dominant and limited by sensor

The fame rate is given by the configured image size. The sensor is usually the limiting factor in 3Donly mode. The maximal frame rate in this case is given by the maximum framerate of the sensor. It is calculated as follows for the PYTHON1300 sensor:

FrameRate = 71.91 MHz / (8850 + SensorHeight*max(80,SensorWidth/4+4))

And for the PYTHON2000 sensor:

FrameRate = 71.91 MHz / (8100 + SensorHeight*max(80,SensorWidth/8+4))

10.4 Maximum Frame Rate (2Donly mode)

A list of common used image dimension and its frame rates is shown in Table 10.1. It shows the maximum possible frame rates when the exposure time is smaller than the read out time.

There is a frame rate calculator in the support section of the Photonfocus web page www.photonfocus.com, which allows to determine the frame rates for any available image dimensions and expsoure time settings.

ROI Dimension [Standard]	D1280-O01	D1984-O01
1984 x 1264	n.a.	44 fps
1920 x 1200 (WUXGA)	n.a.	48 fps
1920 x 1080 (HD)	n.a.	54 fps
1600 x 1200 (UXGA)	n.a.	58 fps
1280 x 1024 (SXGA)	85 fps	85 fps
1024 x 1024	106 fps	106 fps
1280 x 768 (WXGA)	113 fps	113 fps
800 x 600 (SVGA)	233 fps	233 fps
640 x 640	273 fps	273 fps
640 x 480 (VGA)	364 fps	364 fps
480 x 480	486 fps	426 fps

Table 10.1: Frame rates of different ROI settings for D1280-O01 and D1984-O01 camera series in 2Donly (minimal exposure time).

10.5 Maximum Frame Rate in 3D modes

A list of common used image dimension and its frame rates is shown in Table 10.2. It shows the maximum possible frame rates when the exposure time is smaller than the read out time.

There is a high speed mode that provides higher scanning speed at the cost of reduced data accuracy. The "HS" in the Table 10.2 refers to this high speed mode.

ROI Dimension [Standard]	D1280-O01	D1280-O01 HS	D1984-O01	D1984-O01 HS
1984 x 1264	n.a.	n.a.	220 fps	429 fps
1984 x 1024	n.a.	n.a.	270 fps	524 fps
1984 x 512	n.a.	n.a.	524 fps	990 fps
1984 x 256	n.a.	n.a.	990 fps	1781 fps
1984 x 128	n.a.	n.a.	1781 fps	2968 fps
1984 x 64	n.a.	n.a.	2968 fps	4448 fps
1984 x 32	n.a.	n.a.	4448 fps	5926 fps
1984 x 16	n.a.	n.a.	5926 fps	6613 fps
1984 x 11	n.a.	n.a.	6613 fps	6613 fps
1280 x 1024	211 fp	411 fps	408 fps	781 fps
1280 x 512	411 fps	783 fps	781 fps	1435 fps
1280 x 256	783 fps	1428 fps	1435 fps	2471 fps
1280 x 128	1428 fps	2430 fps	2471 fps	3866 fps
1280 x 64	2430 fps	3741 fps	3866 fps	5367 fps
1280 x 32	3741 fps	5122 fps	5387 fps	6704 fps
1280 x 16	5122 fps	5790 fps	6704 fps	7260 fps
1280 x 11	5790 fps	5790 fps	7260 fps	7260 fps
640 x 1024	406 fps	774 fps	764 fps	1407 fps
640 x 512	774 fps	1414 fps	1407 fps	2428 fps
640 x 256	1414 fps	2409 fps	2428 fps	3814 fps
640 x 128	2409 fps	3716 fps	3814 fps	5336 fps
640 x 64	3716 fps	5099 fps	5336 fps	6665 fps
640 x 32	5099 fps	6264 fps	6665 fps	7613 fps
640 x 16	6264 fps	6746 fps	7613 fps	7968 fps
640 x 11	6746 fps	6746 fps	7968 fps	7968 fps

Table 10.2: Frame rates of different ROI settings for D1280-O01 and D1984-O01 camera series in 3Donly mode (minimal exposure time).

11

Image Data Processing

11.1 Overview

The pixel, which are read out of the image sensor, are processed in the cameras data path. The sequence of blocks is shown in figure Fig. 11.1.

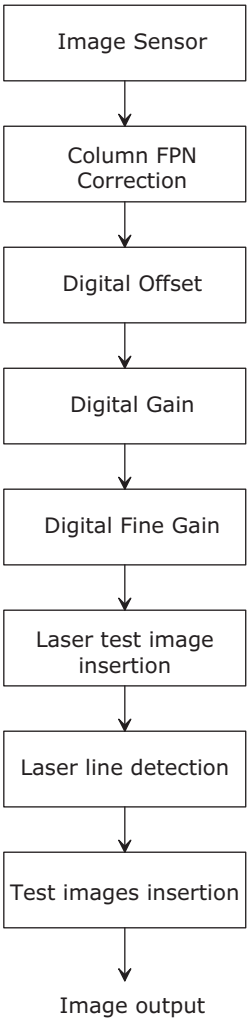

Figure 11.1: Camera data path

11.2 Column FPN Correction

Due to the readout structure of the image sensors there is a column-wise fixed pattern noise (FPN). The Column FPN Correction (ColCorrection) adds or subtracts a fixed value to a column. These values are obtained by a calibration process. The ColCorrection of the camera was calibrated at Photonfocus production facility.

11.2.1 Enable / Disable the Column FPN Correction

The Column FPN Correction can be enabled or disabled with the property `ColCorrection_Enable` (in category `Photonfocus/ColCorrection`). By default the correction is enabled.

11.2.2 Calibration of the Column FPN Correction

The Column FPN Correction of the camera is correctly calibrated at Photonfocus production facility. Although a new calibration is normally not required, you can recalibrate the Column FPN Correction with the following instructions:

1. Setup the camera to the mode where it will be usually used. (Exposure time, ...). The width and height should be set to its maximal value.

   If different exposure times will be used, calibrate the camera under the longest exposure time.

2. Start the aqcuisition of the camera.
3. Close the lens of the camera or put a cap on the lens. The calibration requires an uniform dark image. The black level offset should be set so that all pixels (except defect pixels) have values above 0.
4. Run the command `ColCorrection_CalibrateBlack` (category `ColCorrection`) by clicking on the corresponding button.

   The calibration process needs some images in order to do the calibration. If the camera is in triggered mode, the user must apply the corresponding triggers.

   To get the best calibration results, the camera should have achieved the working temperatur.

5. Run the command `ColCorrection_Update` by clicking on the corresponding button. Read the `ColCorrection_Busy` value which should be 0 after the calibration has finished. Repeat this step if its value is not 0. If the `ColCorrection_Busy` value doesn't show 0 after various tries, check if the camera receive triggers, when the triggered mode is activated.
6. Check the values of the properties `ColCorrection_Overflow` and `ColCorrection_Underflow`. Both should have the value 0 after calibration. If `ColCorrection_Overflow` is not 0, then decrease `BlackLevel` (in category `AnalogControl`) and re-run the procedure from step 4 on. If `ColCorrection_Underflow` is not 0, then increase `BlackLevel` (in category `AnalogControl`) and re-run the procedure from step 4 on.
7. The Column FPN correction is now calibrated. The calibration values are stored in the camera's RAM and these values are lost when the camera power is turned off. To store the calibration values to permanent memory see Section 11.2.3.

Column noise changes with different analog gain settings. The column FPN correction of the camera needs to be recalibrated when the analog gain setting is changed.

11.2.3 Storing the calibration in permanent memory

After running the calibration procedure (see Section 11.2.2) the calibration values are stored in RAM. When the camera is turned off, their values are lost.

To prevent this, the calibration values must be stored in flash memory. This can be done by clicking on the property `ColCorrection_SaveToFlash` (in category `ColCorrection`). Wait until the command has been finished, i.e.the property `ColCorrection_Busy` (category `Correction` / `ColCorrection`) is 0. `ColCorrection_Busy` can be updated by clicking on the property `ColCorrection_Update` (in category `Calibration`).

Storing the calibration in permanent memory overwrites the factory calibration.

11.3 Gain and Offset

There are three different gain settings on the camera:

Analog Gain Analog gain on the image sensor. Available values: x1, x1.6, x2.0, x2.6, x3.2 and x4.0. Note that `Digital Offset` is applied after the `Analog Gain`.

Gain (Digital Fine Gain) Digital fine gain accepts fractional values from 0.01 up to 15.99. It is implemented as a multiplication operation. Colour camera models only: There is additionally a gain for every RGB colour channel. The RGB channel gain is used to calibrate the white balance in an image, which has to be set according to the current lighting condition.

Digital Gain Digital Gain is a coarse gain with the settings x1, x2, x4 and x8. It is implemented as a binary shift of the image data where '0' is shifted to the LSB's of the gray values. E.g. for gain x2, the output value is shifted by 1 and bit 0 is set to '0'.

The resulting gain is the product of the three gain values, which means that the image data is multiplied in the camera by this factor.

Digital Fine Gain and Digital Gain may result in missing codes in the output image data.

A user-defined value can be subtracted from the gray value in the digital offset block. If digital gain is applied and if the brightness of the image is too big then the interesting part of the output image might be saturated. By subtracting an offset from the input of the gain block it is possible to avoid the saturation.

11.4 Laser test image

A Laser Test Image has been added that resembles a moving laser line (see Fig. 11.2) and it is placed just before the peak detection. Therefore it can be used to test if the 3D data is correctly processed during application development.

Figure 11.2: Laser test image

11.5 3D Features

11.5.1 Overview

The MV0 Python 3D06 cameras contain a very accurate laser line detector for laser triangulation (measurement of 3D profiles) that extracts 3D information in real time. For more details see Section 11.5.4.

The camera should be placed so that the laser line is located in horizontal direction. The outputs of the laser detector (LineFinder or COG) are the location coordinate of the laser line, the width of the laser line and the peak height, representing the signal intensity of the laser line (see Section 11.5.3).

The camera has a special mode (see 2D&3D mode in Section 11.5.5) for setup and debugging purposes that allows to view the image and the detected laser line in the same image.

11.5.2 Measuring Principle

For a triangulation setup a laser line generator and a camera is used. There are several configurations which are used in the laser triangulation applications. Which setup is used in an application is determined by the scattering of the material to be inspected. There are setups for highly scattering materials and others for nearly reflecting surfaces.

In addition the penetration depth of light depends on the wavelength of light. The longer the wavelength the deeper is the penetration of the light. Historically red line lasers with a wavelength around 630 nm were used. With the modern high power semiconductor line laser in blue (405 nm), green and also in the near infrared there is the possibility to adapt the wavelengths according to the inspection needs.

But not only the penetration depth affects the choice of the wavelength of the line laser. For an accurate measurement, other disturbing effects such as radiation or fluorescence of the object or strong light from neighbourhood processes have to be suppressed by optical filtering and an appropriate selection of the laser wavelength. Hot steel slabs for instance are best inspected with blue line laser because of the possibility to separate the laser line with optical filters from temperature radiation (Planck radiation) which occurs in red and NIR.

The accuracy of the triangulation system is determined by the line extracting algorithm, the optical setup, the quality parameters of the laser line generator and the parameters of the lens which makes optical engineering necessary.

Triangulation Setup 1

In this setup the camera points at a viewing angle α to the laser line projected from the top. A larger angle leads to a higher resolution. With larger angles the range of height is reduced. Small angles have the benefit of little occlusions.

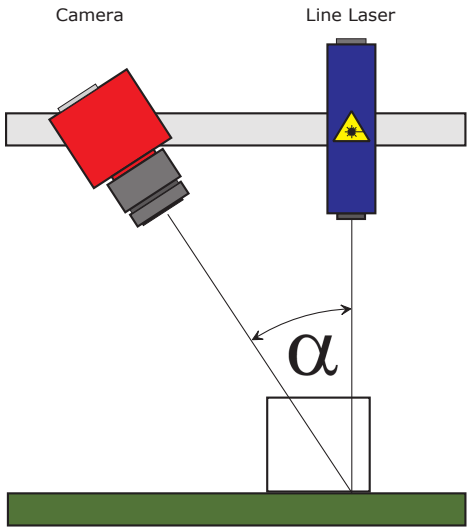

Figure 11.3: Triangulation setup 1

Triangulation Setup 2

This setup shows an opposite configuration of the laser line and the camera. The resolution at same triangulation angle is slightly higher but artefacts which occur during the measurement at the borders of the object have to be suppressed by software.

Triangulation Setup 3

In this setup the laser line generator and the camera are placed in a more reflecting configuration. This gives more signal and could be used for dark or matte surfaces. In case of reflecting surfaces there is only a little amount of scattering which can be used as signal for triangulation. Also in this case this triangulation setup helps to get results.

Triangulation Setup 4

In contrast to setup 3 this setup is used for high scattering material or for application where strong reflections of the object have to be suppressed. The resolution is reduced due to the relations of the angles α and β.

11.5.3 Laser Line Detection

The laser line detectors (LineFinder and COG) each take two threshold values as their input, a signal threshold and a width threshold. The thresholds of the different algorithms are configured seperately. They fulfill the following purposes:

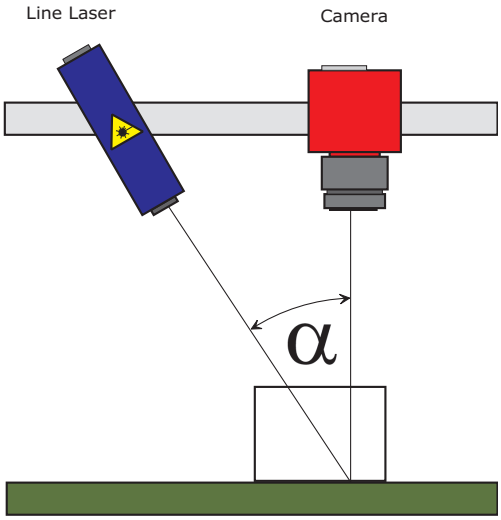

Figure 11.4: Triangulation setup 2

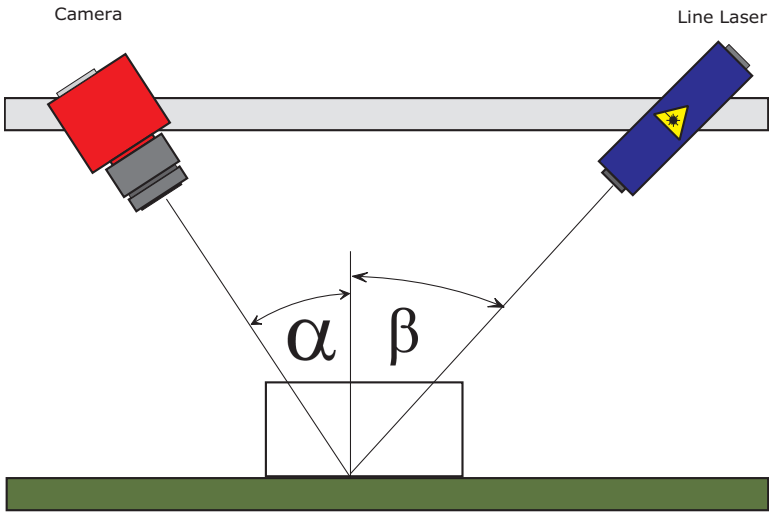

Figure 11.5: Triangulation setup 3

- All pixels with grey value below the signal threshold value will be ignored. This filters out the image background.
- The width threshold is used in the calculation of the laser line width (see below). It has to be higher than (or equal to) the signal threshold.

The LineFinder Algorithm has an additional configurable threshold called saturation hysteresis. This feature becomes relevant when a lot of pixels in a laser line are saturated. In this case, the algorithm starts counting saturated pixels at the first saturated pixel in a column, but only stops counting when the pixel value drops below the saturation hysteresis threshold again.

The following output values are calculated column wise (see also Fig. 11.7):

Peak coordinate Vertical coordinate of the laser line peak

Laser line width The laser line width is the number of pixels that have a grey value above the width threshold around the laser peak. If there are no pixels at the peak position that are

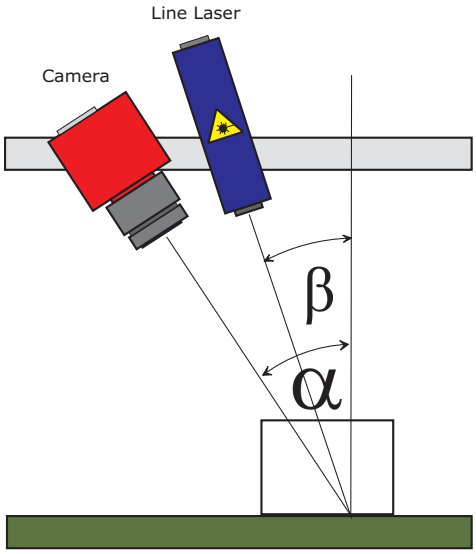

Figure 11.6: Triangulation setup 4

above the width threshold, the resulting laser line width is 0. In this case the width threshold value should be changed.

Laser line height For the COG algorithm, the laser line height is the highest grey value of the detected laser line. In order to suppress noise, the laser line height of the LineFinder algorithm is the mean value between the two pixels surrounding the peak position. Depending on the shape of the peak, this may not result in the maximum peak value.

The value of the threshold should be set slightly above the grey level of the image background. The width threshold value should be set so that the maximum peak width of 63 is not exceeded too often.

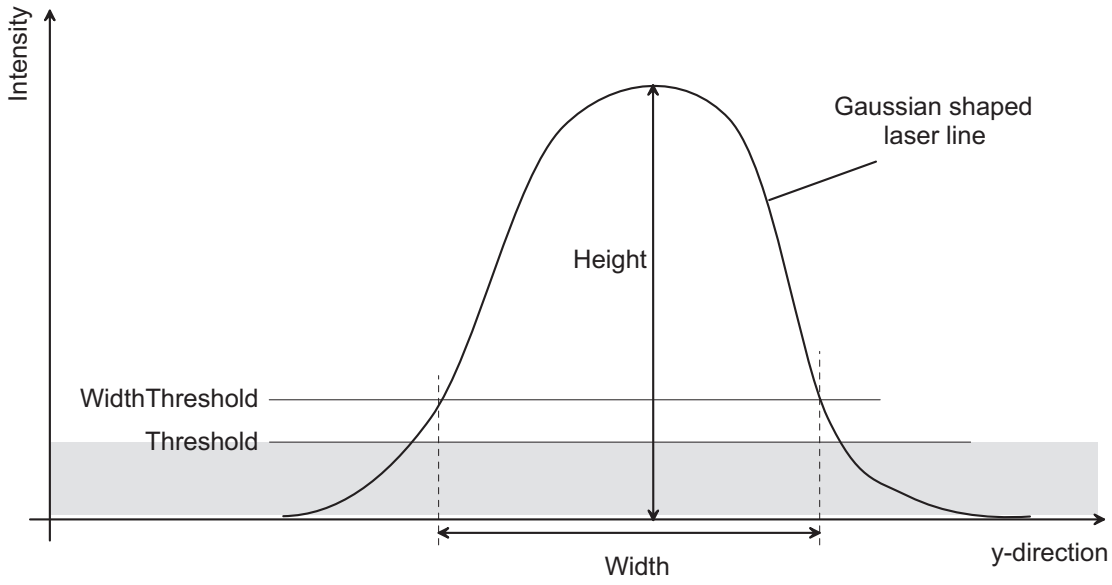

Figure 11.7: Schematic of the cross section of a laser line

11.5.4 Interpolation Technique

Structured light based systems crucially rely on an accurate determination of the peak position of the Gaussian shaped laser line. The LineFinder algorithm in the MV0 Python 3D06 cameras applies nonlinear interpolation techniques, where 16 data points are calculated between two pixels within the Gaussian shaped laser line. This technique is superior to other commonly used detection techniques, such as the detection of peak pixel intensity across the laser line (resulting in pixel accuracy) or the thresholding of the Gaussian and calculation of the average (resulting in sub pixel accuracy).

The nonlinear interpolation technique used in the LineFinder algorithm results in a better estimate of the maximum intensity of the laser line. The data mapping for the 3D data block is shown in Section 11.5.6 and the basics of the interpolation principle are illustrated in Fig. 11.8.

The line position (PEAK) is split into a coarse position and a fine position (sub-pixel). The coarse position is based on the pixel pitch and is transferred in PEAK [15:4]. The sub-pixel position that was calculated from the LineFinder algorithm is mapped to PEAK [3:0] (see also Section 11.5.6).

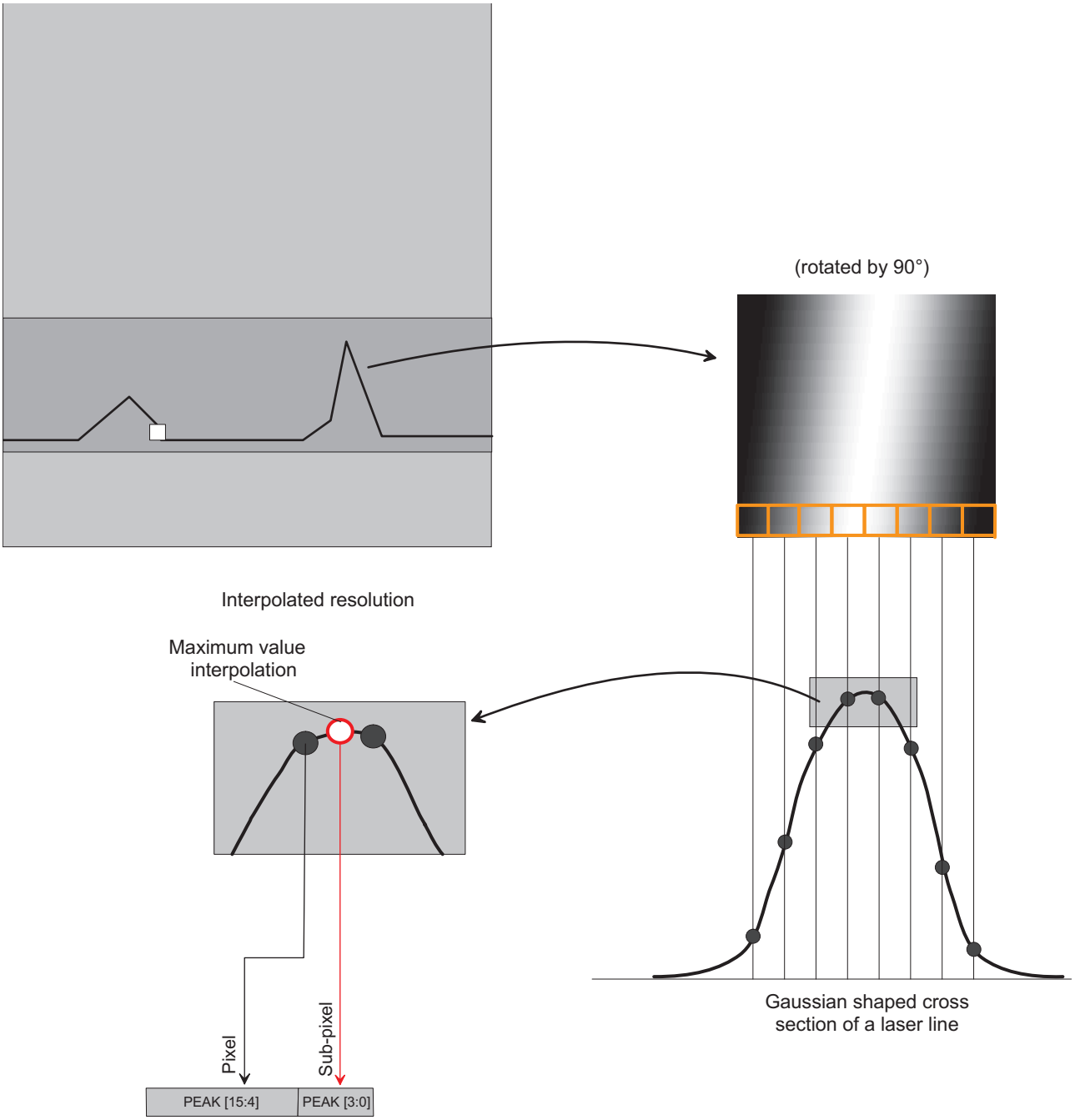

Figure 11.8: Interpolation technique provides sub-pixel accuracy in the detection of the laser peak by interpolating up to 16 data points between two pixels.

11.5.5 3D modes

The camera has three modes that determine which data is transmitted to the user:

2Donly Laser detection is turned off and camera behaves as a normal area scan camera. This mode serves as a preview mode in the setup and debugging phase.

2D&3D Laser line detection is turned on. The sensor image (2D image) is transmitted together with the 3D data. In the PF 3D Suite, the detected laser line is shown as a coloured line in the 2D image. This mode serves as a preview mode in the setup and debugging phase of the triangulation system.

3Donly Laser line detection is turned on and only 3D data is transmitted. The scan rate of this mode is considerably faster than the 2D&3D mode.

The 3Donly mode must be used to achieve the highest scan rate.

11.5.6 3D data format

For every peak there are 4 or 2 lines that contain the 3D data. Every pixel contains 8 bits of 3D data which are always placed in the 8 LSB. A table with the bit assignment of the 3D data for `DataFormat3D`=2 is shown in Fig. 11.9, `DataFormat3D`=3 in Fig. 11.10 and `DataFormat3D`=4 in Fig. 11.11 . Note that every value described in this table (with exception of STAT data) is the value for the corresponding image column. The peak position coordinate (PEAK) is relative to the scan area of the peak. To get the absolute position on the image sensor, the value Peak_3DY must be added.

LL_WIDTH is the laser line width and LL_HEIGHT is the laser line height as explained in Section 11.5.3.

STAT value: the status (value) of some parameters and internal registers are placed here. The status information is described in Section 11.6.2. In every pixel (column) 4 bits of this status information send, starting with the LSB in the first column.

3D row	Bits								Description
	7	6	5	4	3	2	1	0	
0	PEAK[15:8]								Detected laser line coordinate. PEAK[15:4]: integer part, PEAK[3:0]: fractional part.
1	PEAK[7:0]								

Figure 11.9: 3D data format. DataFormat3D=2

3D row	Bits								Description
	7	6	5	4	3	2	1	0	
0	PEAK[15:8]								Detected laser line coordinate. PEAK[15:4]: integer part, PEAK[3:0]: fractional part.
1	PEAK[7:0]								
2	'0'	'0'	LL_WIDTH[5:0]						LL_WIDTH: laser line width
3	LL_HEIGHT[3:0]				STAT				LL_HEIGHT: laser line height (4 MSB). STAT: Status information

Figure 11.10: 3D data format, DataFormat3D=3

3D row	Bits								Description
	7	6	5	4	3	2	1	0	
0	PEAK[15:8]								Detected laser line coordinate. PEAK[15:4]: integer part, PEAK[3:0]: fractional part.
1	PEAK[7:0]								
2	LL_HEIGHT[7:0]								LL_HEIGHT: laser line height (8 bit).
3	LL_WIDTH[3:0]				STAT				LL_WIDTH: laser line width (4 MSB). Width of laser line is 4*LL_WIDTH STAT: Status information

Figure 11.11: 3D data format. DataFormat3D=4

Calculation example (DataFormat3D=3): Suppose that the 3D data of image column n has the following data: 14 / 140 / 10 / 128 (see also Fig. 11.12).

The position of the laser line is in this case 232.75: integer part is calculated from the 8 bits of 3D row 0 followed by the 4 MSB of 3D row 1: 0b000011101000 = 0x0e8 = dec 58. The fractional part is calculated from the 4 LSB of 3D row 1: 0b1100 = 0xc. This value must be divided by 16: 0xc / 16 = 0.75.

The laser line width is 10 pixels (6 LSB of 3D row 2).

The LL_HEIGHT value is in this case 8 (=4 MSB of 3D row 3). These are the 4 MSB of the mean value between the two pixels around the peak position. At 12 bit resolution, the mean value lies between 0x800 (=2048) and 0x8ff (=2303).

3D row	Bits								
	7	6	5	4	3	2	1	0	
0	0	0	0	0	1	1	1	0	Position integral part
1	1	0	0	0	1	1	0	0	Position fractional part
2	0	0	0	0	1	0	1	0	Laser line width
3	1	0	0	0	0	0	0	0	

LL_HEIGHT

Figure 11.12: 3D data calculation example (3D06 models)

11.5.7 Transmitted data in 2D&3D mode

The transmitted image in 2D&3D mode is shown in Fig. 11.13. The data is transmitted in the following order:

- Raw image
- 3D data

Resulting height in 2D&3D mode is:

Hres = Peak0_3DH + 4 (if DataFormat3D=3 or 4), or

Hres = Peak0_3DH + 2 (if DataFormat3D=2)

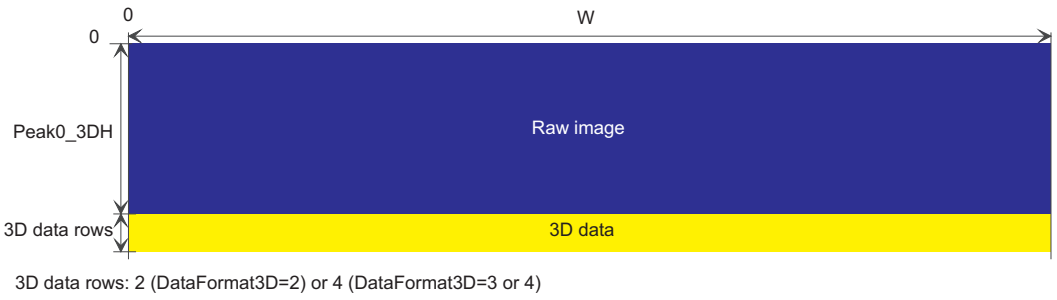

Figure 11.13: Transmitted image in 2D&3D mode

11.5.8 Transmitted data in 3Donly mode

In 3Donly mode only the 3D data is transmitted. The FrameCombine feature (see Section 11.5.9) was added to lower the transmitted frame rate. For FrameCombine = f, the data for f images are combined into one image.

Resulting height in 3Donly mode is therefore:

Hres = f * 4 (if DataFormat3D=3 or 4), or

Hres = f * 2 (if DataFormat3D=2)

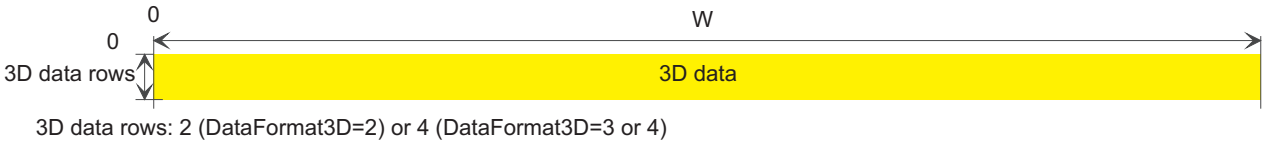

Figure 11.14: Transmitted image in 3Donly mode

11.5.9 Frame Combine

Very high frame rates that are well over 1000 fps can be achieved in 3Donly mode. Every frame (image) activates an interrupt in the GigE software which will issue a high CPU load or the frame rate can not be handled at all by an overload of interrupts.

To solve this issue, the FrameCombine mode has been implemented in the MV0 Python 3D06 camera. In this mode, the data of n images are bundled into one frame. In the example shown in Fig. 11.15 4 frames are combined into one frame (`FrameCombineNrFrames`=4). In this case there are 4 times less software interrupts that indicate a new frame than without FrameCombine and the CPU load is significantly reduced. Instead of receiving 4 images with 5 rows, only one image with 20 rows is received which reduces the frame rate on the computer side. Without FrameCombine, the CPU load on the computer might be too high to receive all images and images might be dropped. The value n (=`FrameCombineNrFrames`) can be set by the user. This value should be set so that the resulting frame rate is well below 1000 fps (e.g. at 100 fps). E.g. if the camera shows a maximal frame rate of 4000 (property `AcquisitionFrameRateMax`), then `FrameCombineNrFrames` could be set to 40 to have a resulting frame rate of 100 fps. The PF 3D Suite supports this mode.

The `FrameCombineNrFrames` value should be set so that the resulting frame rate is well below 1000 fps.

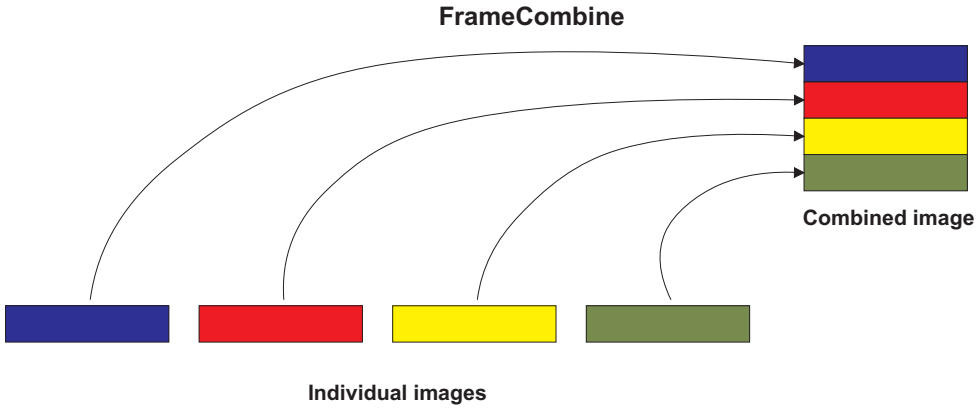

Figure 11.15: Example for FrameCombine with 4 frames

Frame Combine Timeout

There exist possibilities to transmit the combined frame even if there is not enough data to fill it. E.g. It can be desirable to get the 3D data immediately after an item on the conveyor belt has passed.

FrameCombine_Timeout A timeout can be specified after which the combined frame will be transmitted, regardless if there was enough data to fill it. The timeout counter is reset after each frame and counts until a new trigger has been detected or until the timeout is reached.

A FrameCombine_Timeout value of 0 disables the FrameCombine timeout feature.

FrameCombine_ForceTimeout The transmission of the combined frame is forced by writing to the `FrameCombine_ForceTimeout` property.

When the FrameCombine is finished by a timeout, then the remaining data in the combined frame will be filled with filler data: the first two pixels of every filler row have the values 0xBB (decimal 187) and 0x44 (decimal 68). The remaining pixels of the filler rows have the value 0. An example is shown in Fig. 11.16. The timeout occured after the second frame and the two remaining frames are filled with dummy data. `DataFormat3D`=2 is used in this example.

The FrameCombine mode is only available in 3Donly mode.

When acquisition is stopped, then a pending combined frame will be discarded. To get the pending combined frame, a `FrameCombine_ForceTimeout` command must be sent prior to stopping the acquisition.

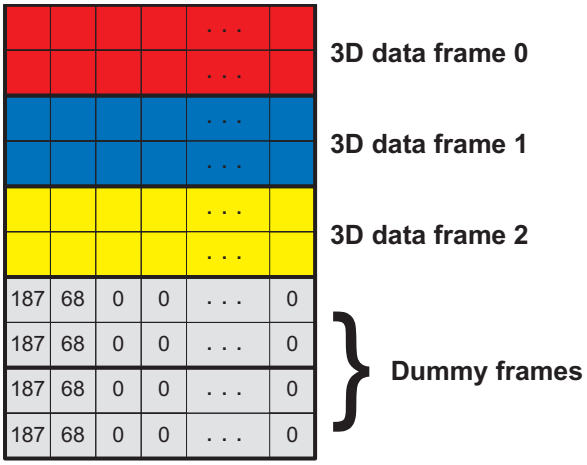

Figure 11.16: Example for timeout with dummy frames in FrameCombine with 5 frames

11.5.10 Peak Filter

Peaks that are detected by the LineFinder algorithm can be filtered by applying the parameters described in this section. A filtered peak appears as all 3D data set to 0, which is the same as if no peak occurred.

Filtering peaks might increase the robustness of the 3D application by filtering peaks that were caused by unwanted effects, such as reflections of the laser beam.

PeakFilter parameters:

Peak0_EnPeakFilter Enable peak filtering. If set to False, the PeakFilter settings are ignored.

Peak0_PeakFilterHeightMin Filters all peaks (columns) where 256*LL_HEIGHT < Peak0_PeakFilterHeightMin (see Fig. 11.10 and Fig. 11.17).

Peak0_PeakFilterHeightMax Filters all peaks (columns) where 256*LL_HEIGHT > Peak0_PeakFilterHeightMax (see Fig. 11.10 and Fig. 11.17).

Peak0_PeakFilterWidthMin Filters all peaks (columns) where LL_WIDTH < Peak0_PeakFilterWidthMin (see Fig. 11.10 and Fig. 11.18).

Peak0_PeakFilterWidthMax Filters all peaks (columns) where LL_WIDTH > Peak0_PeakFilterWidthMax (see Fig. 11.10 and Fig. 11.18).

An illustration of the PeakFilterHeight parameters is shown in Fig. 11.17. The red line denotes a situation where the laser peak is filtered because the height is too big or too small. An illustration of the PeakFilterWidth parameters is shown in Fig. 11.18. The red line denotes a situation where the laser peak is filtered because the width is too big or too small.

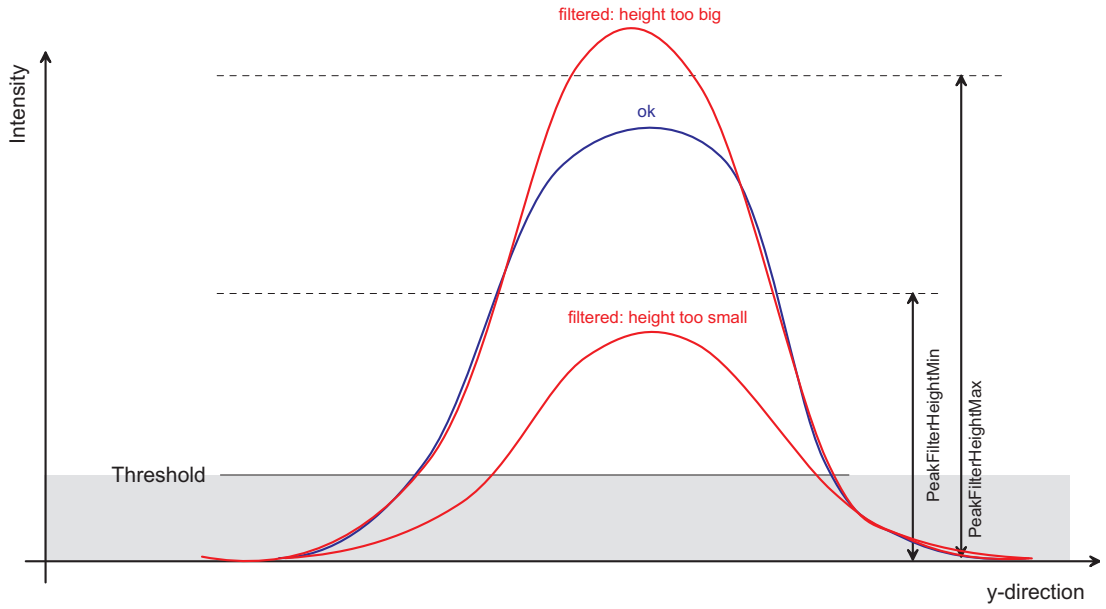

Figure 11.17: Illustration of the PeakFilterHeight parameters

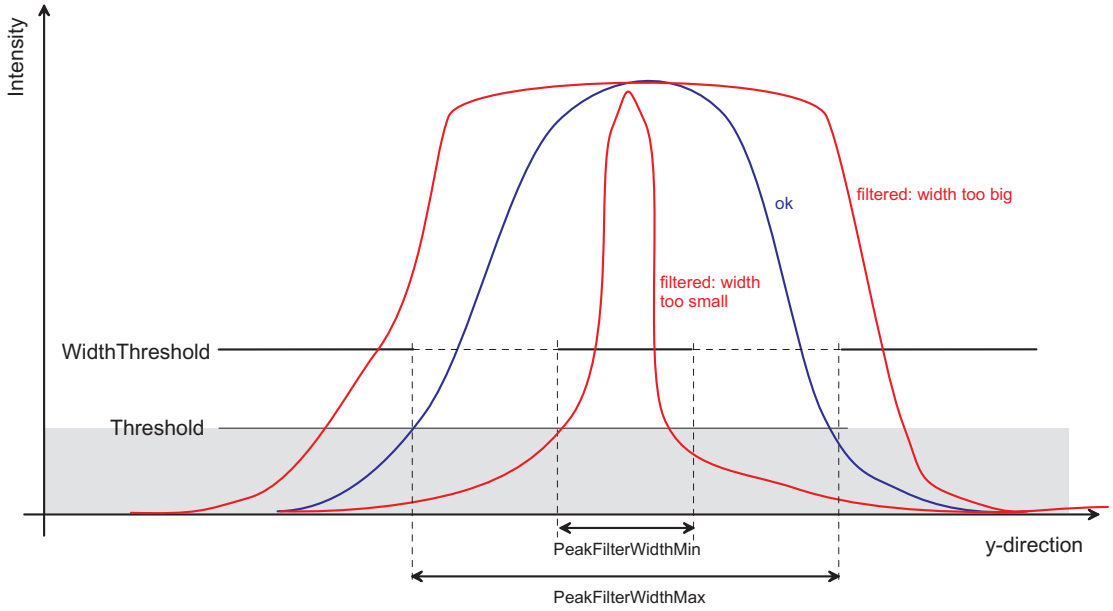

Figure 11.18: Illustration of the PeakFilterWidth parameters

11.5.11 Peak Mirror

The property Peak_Mirror flips the peak coordinates vertically by applying the formula Peak_3DH-p-1, where Peak_3DH=height of scan area and p=detected laser position.

Depending on the geometrical setup of the camera and the lasers, a bigger object height may be indicated by either a smaller or larger position. The PeakMirror property can be set to obtain the same orientation every time.

11.5.12 Absolute Coordinates

The 3D coordinates are given relative to the start of the 3D ROI as a default.

When the property Peak0_EnAbsCoordinate is set to True then the 3D coordinates are given relative to the first row of the sensor. This is useful if the 3D-ROI is not kept constant.

Example: Peak0_EnAbsCoordinate = True, Peak0_3DY=200: If the peak is detected in row 50 of the ROI, the value 250 (50+Peak0_3DY) would be given as resulting 3D coordinate.

MirrorPeak and absolute coordinates

IfPeak0_Mirror =True and Peak0_EnAbsCoordinate = True then the formula to calculate the 3D coordinate is:

c' = MAX_H - Peak[i]_3DY - c - 1,

where c is the original (relative) coordinate without mirroring. MAX_H depends on the camera sensor.

The resulting coordinates are then relative to the last row of the sensor.

11.5.13 High speed mode

The High Speed Mode provides higher scanning speed at the cost of reduced data accuracy (see also Section 10.5 for a list of frame rates). The average loss in data accuracy is +/- 0.5 pixel.

High speed mode is only available in 3Donly mode

High speed mode is not available in combination with Moving ROI

11.6 Status Line and Image Information

There are camera properties available that give information about the acquired images, such as integration time, ROI settings or average image value. These properties can be queried by software. Alternatively, a status line within the image data can be switched on that contains all the available image information.

11.6.1 Image Average Value

The average image value gives the average of an image in 12 bit format (0 .. 4095 DN), regardless of the currently used grey level resolution. Note that the 12-bit format was chosen to be compatible with other Photonfocus cameras

11.6.2 Status Information

Status information is inserted in the 4 LSB in the last 3D data row if DataFormat3D = 3 or 4 (see bits labeled STAT in Fig. 11.10). LSB are transmitted first (see Table 11.1). The status information is divided in fields of 32 bits each, where every information field corresponds to one information parameter (see Table 11.2). Unused bits are set to 0.

Col 0	Col 1	Col 2	Col 3	...	Col n
STAT[3:0]	STAT[7:4]	STAT[11:8]	STAT[15:12]	...	STAT[4*n+3:4*n]

Table 11.1: STAT value

11.6.3 Camera Type Codes

Status bits	Parameter	Description
STAT[31:0]	CNT_0	Counter 0 Value (see Section 5.1)
STAT[63:32]	CNT_1	Counter 1 Value (see Section 5.1)
STAT[95:64]	CNT_2	Counter 2 Value (see Section 5.1)
STAT[127:96]	CNT_3	Counter 3 Value (see Section 5.1)
STAT[159:128]	ENC_POS	Encoder position (Not available in this camera)
STAT[160:160]	M_TRIG_LEVEL	Line Input Level
STAT[192]	MOV_ROI_COL_WARN	Applies to moving ROI only: value 0: there are more columns with a detected laser line than specified in `Peak0_MovingROIMinCol`. Value 1: there are less columns with a detected laser line than specified in `Peak0_MovingROIMinCol`. (Not available in this camera)
STAT[193]	MOV_ROI_BORDER	Applies to moving ROI only: value 1: the distance from the mimimum or maximum coordinate to the corresponding image border is less than specified by `Peak0_MovingROIMinDistance`. This is an indication that perhaps the height of 3D-ROI is too small for the current situation. (Not available in this camera)
STAT[194]	MOV_ROI_LASER_FINDER	Applies to moving ROI only: value 1: the current frame is a laser finder window. (Not available in this camera)
STAT[206:196]	PEAK0_ROI_Y	Vertical starting position of the current 3D ROI. This information might be useful for moving ROI.
STAT[234:224]	MOV_ROI_MIN_POS	Applies to moving ROI only: minimal position of laser line in current image. (Not available in this camera)
STAT[250:240]	MOV_ROI_MAX_POS	Applies to moving ROI only: maximal position of laser line in current image. (Not available in this camera)
STAT[257:256]	ALGORITHM_3D	The algorithm that produced the 3D data. 1: LineFinder, 2: COG.
STAT[303:288]	TYPE_CODE	Camera Type Code (see Table 11.3)
STAT[351:320]	SN_NUMBER	Camera Serial Number
STAT[383:352]	CUSTOM_0	Custom value 0: value of register StatusLineCustomValue0 that can be set by the user
STAT[415:384]	CUSTOM_1	Custom value 1: value of register StatusLineCustomValue1 that can be set by the user

Table 11.2: Status fields

Camera Model	Camera Type Code
MV0-D1280-O01-3D06-288-G2	511
MV0-D1984-O01-3D06-576-G2	512
MV0-D2592-O01-3D06-576-G2	TBD

Table 11.3: Type codes of Photonfocus MV0 Python 3D06 GigE camera series

11.7 Test Images

Test images are generated in the camera FPGA, independent of the image sensor. They can be used to check the transmission path from the camera to the acquisition software. Independent from the configured grey level resolution, every possible grey level appears the same number of times in a test image. Therefore, the histogram of the received image must be flat.

A test image is a useful tool to find data transmission errors or errors in the access of the image buffers by the acquisition software.

The analysis of the test images with a histogram tool gives a flat histogram only if the image width is a multiple of 256 (in 8 bit mode).

11.7.1 Ramp

Depending on the configured grey level resolution, the ramp test image outputs a constant pattern with increasing grey level from the left to the right side (see Fig. 11.19).

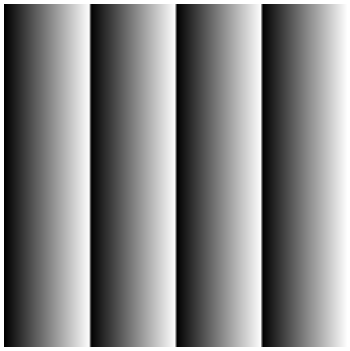

Figure 11.19: Ramp test images: 8 bit output

11.7.2 LFSR

The LFSR (Linear Feedback Shift Register) test image outputs a constant pattern with a pseudo-random grey level sequence containing every possible grey level that is repeated for every row. The LFSR test pattern was chosen because it leads to a very high data toggling rate, which stresses the interface electronic and the cable connection.

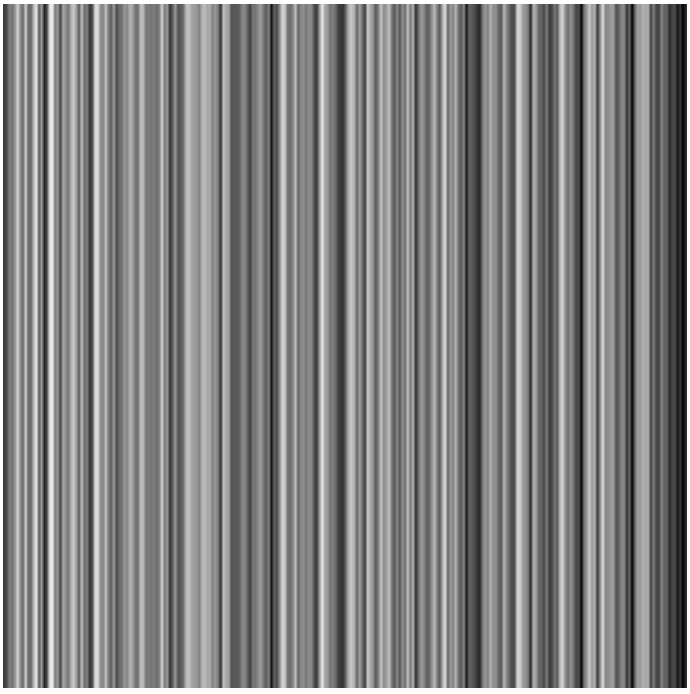

Figure 11.20: LFSR (linear feedback shift register) test image

In the histogram you can see that the number of pixels of all grey values are the same.

Please refer to application note [AN026] for the calculation and the values of the LFSR test image.

11.7.3 Troubleshooting using the LFSR

To control the quality of your complete imaging system enable the LFSR mode, set the camera window to 1024 x 1024 pixels (x=0 and y=0) and check the histogram. The camera window can also be set to a multiple of this resolution (e.g. 2048 x 2048 or 4096 x 3072) if the camera model supports this resolution. If your image acquisition application does not provide a real-time histogram, store the image and use an image viewing tool (e.g. ImageJ) to display the histogram.

In the LFSR (linear feedback shift register) mode the camera generates a constant pseudo-random test pattern containing all grey levels. If the data transmission is correctly received, the histogram of the image will be flat (Fig. 11.21). On the other hand, a non-flat histogram (Fig. 11.22) indicates problems, that may be caused either by a defective camera, by problems in the acquisition software or in the transmission path.

Figure 11.21: LFSR test pattern received and typical histogram for error-free data transmission

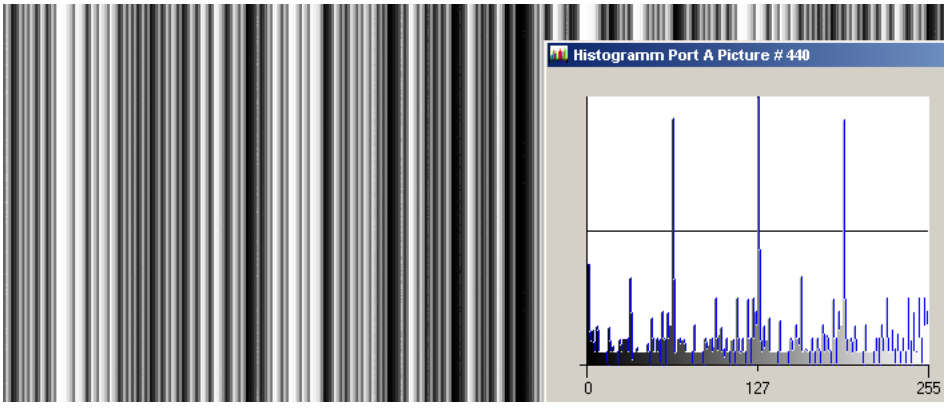

Figure 11.22: LFSR test pattern received and histogram containing transmission errors

In robots applications, the stress that is applied to the camera cable is especially high due to the fast movement of the robot arm. For such applications, special drag chain capable cables are available. Please contact the Photonfocus Support for consulting expertise.

12

Precautions

12.1 IMPORTANT NOTICE!

READ THE INSTRUCTIONS FOR USE BEFORE OPERATING THE CAMERA

STORE THE INSTRUCTIONS FOR USE FOR FURTHER READING

The installation of the camera in the vision system should be executed by trained and instructed employees.

DANGER - Electric Shock Hazard

Unapproved power supplies may cause electric shock. Serious injury or death may occur.

- You must use camera power supplies which meet the Safety Extra Low Voltage (SELV) and Limited Power Source (LPS) requirements.
- If you use a powered hub or a powered switch in PoE or USB vision systems these devices must meet the SELV and LPS requirements.

WARNING - Fire Hazard

Unapproved power supplies may cause fire and burns.

- You must use camera power supplies which meet the Limited Power Source (LPS) requirements.
- If you use a powered hub or a powered switch in PoE or USB vision systems these devices must meet the LPS requirements.

Supply voltages outside of the specified range will cause damage. Check the supply voltage range given in this manual. Avoid reverse supply voltages.

Respect the voltage limits and the common mode rails of the camera control signals. Ensure that the output signals are not over loaded. Respect the power limitations of the outputs. Carefully design the vision system before you connect electronic devices to the camera. Use simulation tools to check your design.

Avoid compensation currents over data cables. Use appropriate ground connections and grounding materials in the installation of your vision system to ensure equal potential of all chassis earth in your system.

Incorrect plugs can damage the camera connectors. Use only the connectors specified by Photonfocus in this manual. Using plugs designed for a smaller or a larger number of pins can damage the connectors.

The cameras deliver the data to the vision system over interfaces with high bandwidth. Use only shielded data cables to avoid EMC and data transmission issues. High speed data cables are susceptible to mechanical stress. Avoid mechanical stress and bending of the cables below the minimum bending radius of the cables during installation of your vision system. For robot applications appropriate cables have to be used.

Inappropriate software code to control the cameras may cause unexpected camera behaviour.

- The code examples provided in the Photonfocus software package are included as sample code only. Inappropriate code may cause your camera to function differently than expected and may compromise your application. The Photonfocus software package is available on the Photonfocus website: www.photonfocus.com.
- To ensure that the examples will work properly in your application, you must adjust them to meet your specific needs and must carefully test them thoroughly prior to use.

Avoid dust on the sensor.

The camera is shipped with a plastic cap on the lens mount. To avoid collecting dust on the camera's IR cut filter (colour cameras) or sensor (mono and mono NIR cameras), make sure that you always put the plastic cap in place when there is no lens mounted on the camera. Follow these general rules:

- Always put the plastic cap in place when there is no lens mounted on the camera.
- Make sure that the camera is pointing down every time you remove or replace the plastic cap, a lens or a lens adapter.
- Never apply compressed air to the camera. This can easily contaminate optical components, particularly the sensor.

Cleaning of the sensor

Avoid cleaning the surface of the camera sensor or filters if possible. If you must clean it:

- Before cleaning disconnect the camera from camera power supply and I/O connectors.
- Follow the instructions given in the section "Cleaning the Sensor" in this manual.

Cleaning of the housing

To clean the surface of the camera housing:

- Before cleaning disconnect the camera from camera power supply and I/O connectors.
- Do not use aggressive solvents or thinners which can damage the surface, the serial number label and electronic parts.
- Avoid the generation of ESD during cleaning.
- Take only a small amount of detergent to clean the camera body. Keep in mind that the camera body complies to the IP40 standard.
- Make sure the detergent has evaporated after cleaning before reconnecting the camera to the power supply.

Cooling

For long life and high accuracy operation, we highly recommend to mount the camera thermally coupled, so that the mounting acts as a heat sink.

13

Hardware Interface

13.1 Absolute Maximum Ratings

Parameter	Value
Camera Control Input Signal Voltage Single Ended	0 V ... +24 V
Camera Control Output Signal Voltage Single Ended	0 V ... +24 V
Camera Control Output Signal Output Current Single Ended	0.1 A
Camera Control Output Signal Output Power Single Ended	0.15 W
ESD Contact Discharge Camera Control Signals	4 kV
ESD Air Discharge Camera Control Signals	8 kV
Fast Transients/Bursts Data and Camera Control Signals	2 kV
Surge immunity Data and Camera Control Signals	1 kV
Maximum Installation Altitude	2000m above sea level

Table 13.1: Absolute Maximum Ratings

13.2 Electrical Characteristics

Parameter	Value
Camera Control Input Single Ended	+5 V ... +20 V

Table 13.2: Electrical Characteristics

13.3 GigE Camera Connector

The GigE cameras are interfaced to external components via

- an x-coded M12 connector to power the camera (PoE) and to transmit configuration, image data and trigger.
- a 4 pole Binder M5 x 0.5 connector for one I/O input and one I/O output.

The connectors are located on the back of the camera. Fig. 13.1 shows the plugs and the status LED which indicates camera operation.

13.4 Power Over Ethernet (PoE)

Device: PoE compliant according to IEEE 802.3af standard Class: 2: (3.84-6.49W) supported Mode: Mode A and Mode B Maximum working voltage according to Standard: 57V at PD side

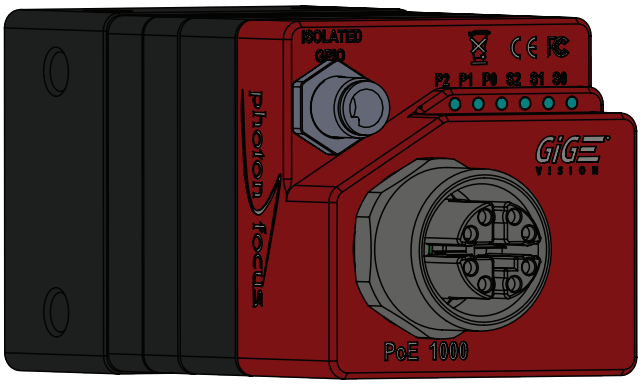

Figure 13.1: Rear view of the GigE camera

13.5 Status Indicator (GigE cameras)

Six LEDs on the back of the camera gives information about the current status of the GigE CMOS cameras. LED S0, S1 and S2 are configurable. It can be selected, which camera status information is showed by these LEDs (see Section 7.2 for the available camera status signals). LED P0, P1 and P2 show the status of the GigE connection and can't be configured by the user.

LED designator	Default function
LED S0	It pulsates, when the camera is not grabbing images. It means, the intensity starts from dark and goes slowly to bright and slowly to dark again.When the camera is grabbing images the LED blinks at a rate equal to the frame rate. At slow frame rates, the LED blinks. At high frame rates the LED changes to an apparently continuous green light, with intensity proportional to the ratio of readout time over frame time.
LED S1	Indicates an active serial communication with the camera.
LED S2	dark, not used in default configuration

Table 13.3: Default LED S0, S1 and S2 configuration of the GigE CMOS cameras

LED designator	GigE Function
LED P0	not used, always off
LED P1	On: acitivity; Off: no activity
LED P2	On: link; Off: no link

Table 13.4: Meaning of LED P0, P1 and P2 of the GigE CMOS cameras

13.6 I/O Connector

13.6.1 Overview

The 4-pole Binder M5 x 0.5 I/O connector contains one external single-ended line input, one external single-ended line output.

The pinout of the I/O connector is described in Appendix A.

A suitable trigger breakout cable for Binder 4 pole connector can be ordered from your Photonfocus dealership.

Simulation with LTSpice is possible, a simulation model can be downloaded from our web site www.photonfocus.com on the software download page (in Support section). It is filed under "Third Party Tools".

Fig. 13.2 shows the schematic of the input and output for the I/O interface. The input and output are isolated.

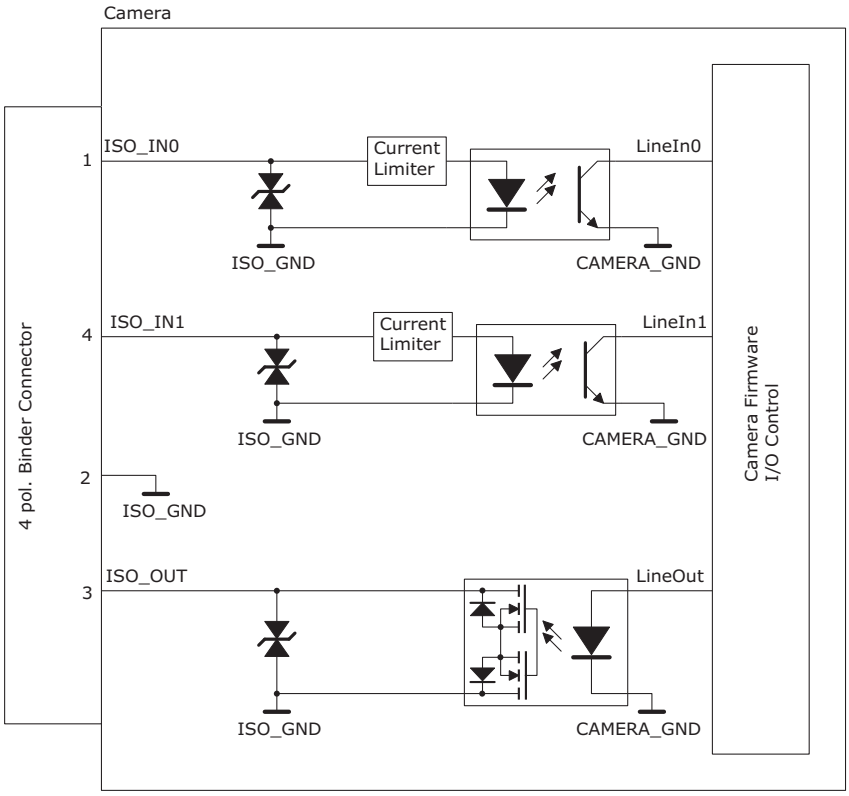

Figure 13.2: Schematic of inputs and output

13.6.2 Encoder Interface

ISO_IN0 and ISO_IN1 can be used as an A/B encoder inputs. Fig. 13.3 shows how to connect the encoder to the camera.

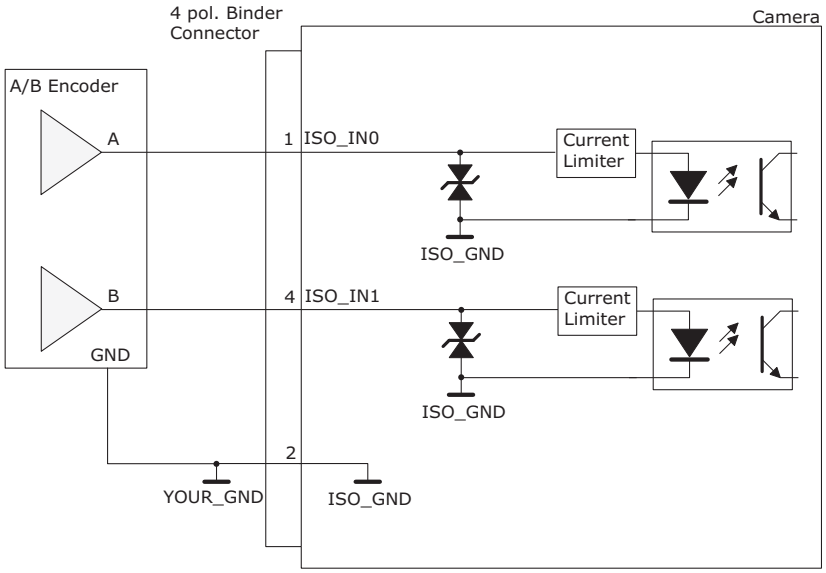

Figure 13.3: Connection of an A/B encoder

The camera supports a single ended encoders only.

13.6.3 Single-ended Line Input

ISO_IN is a single-ended isolated input (see Fig. 13.2).

Fig. 13.4 shows a direct connection to the ISO_IN input.

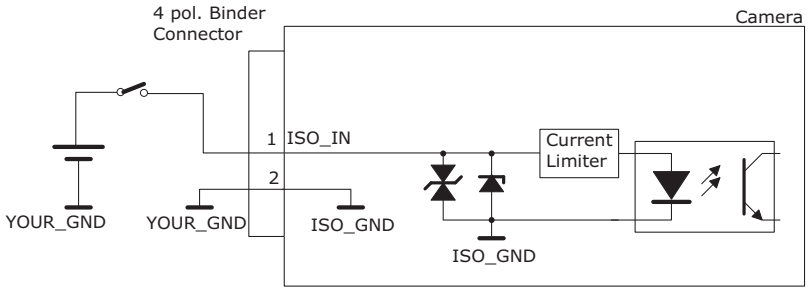

Figure 13.4: Direct connection to ISO_IN

Fig. 13.5 shows how to connect ISO_IN to TTL logic output device.

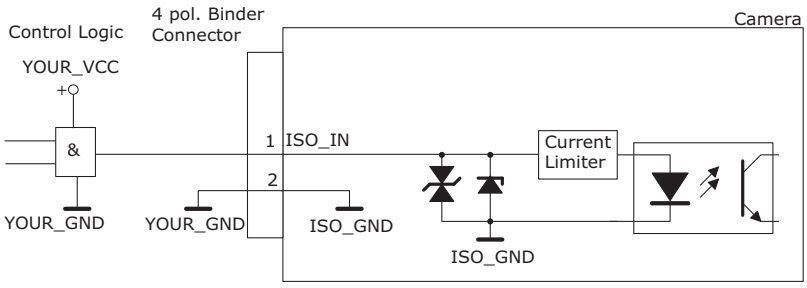

Figure 13.5: Connection to ISO_IN from a TTL logic device

13.6.4 Single-ended Line Output

ISO_OUT is a single-ended isolated output.

Fig. 13.6 shows the connection from the ISO_OUT output to a TTL logic device.

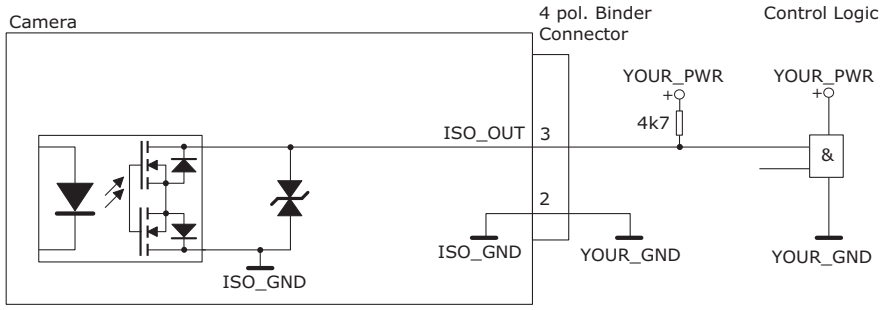

Figure 13.6: Connection example to ISO_OUT

Fig. 13.7 shows the connection from ISO_OUT to a LED.

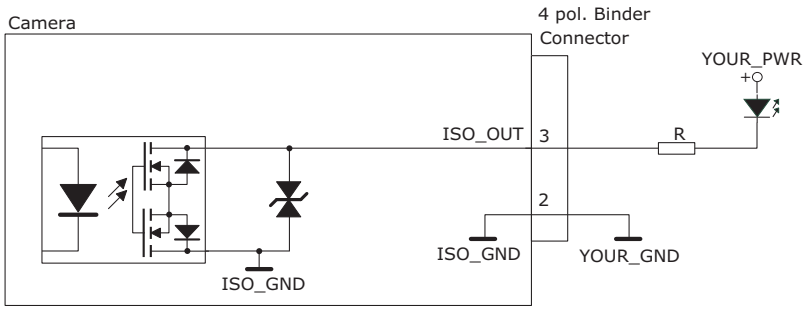

Figure 13.7: Connection from ISO_OUT to a LED

Respect the limits of the opto-isolator in the connection to ISO_OUT. Maximal ratings that must not be exceeded: voltage: 24 V, current: 50 mA, power: 150 mW. (see also Fig. 13.8). The type of the opto-isolator is: Everlight EL3H7C.

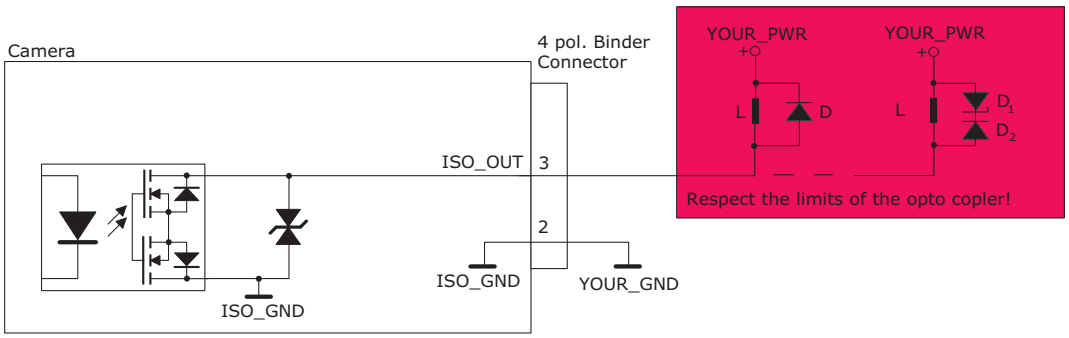

Figure 13.8: Limits of ISO_OUT output

13.6.5 Master / Slave Camera Connection

The trigger input of one Photonfocus MV0 GigE camera can easily connected to the strobe output of another Photonfocus G2 camera as shown in Fig. 13.9. This results in a master/slave mode where the slave camera operates synchronously to the master camera.

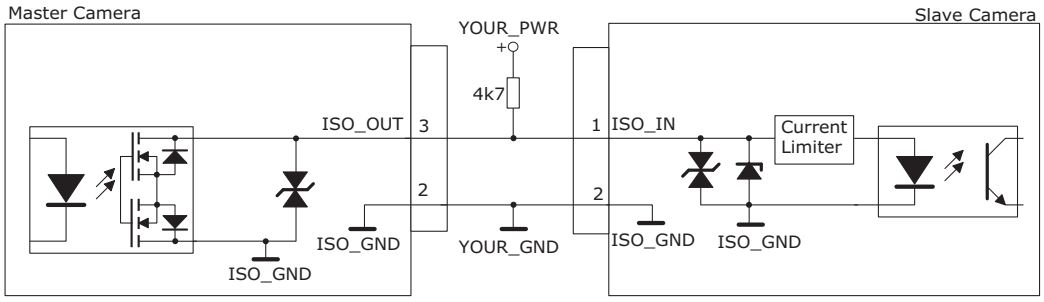

Figure 13.9: Master / slave connection of two Photonfocus MV0 GigE cameras

14

Mechanical Considerations

14.1 Mechanical Interface

During storage and transport, the camera should be protected against vibration, shock, moisture and dust. The original packaging protects the camera adequately from vibration and shock during storage and transport. Please either retain this packaging for possible later use or dispose of it according to local regulations.

14.1.1 Cameras with GigE Interface

Fig. 14.1 shows the mechanical drawing of the camera housing for the Photonfocus MV0 GigE camera series.

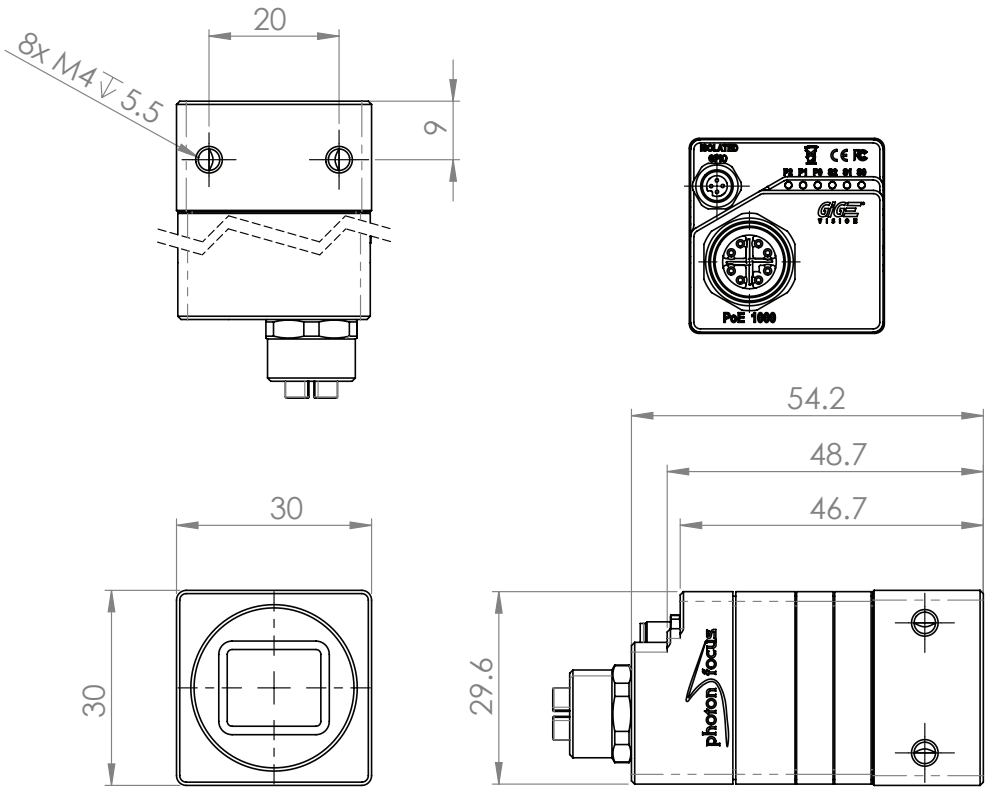

Figure 14.1: Mechanical dimensions of the Photonfocus MV0 Python GigE cameras

For long life and high accuracy operation, we highly recommend to mount the camera thermally coupled, so that the mounting acts as a heat sink. To verify proper mounting, camera temperature can be monitored using the GeniCam command `DeviceTemperature` under GEVDeviceControl.

14.2 Optical Interface

14.2.1 Cleaning the Sensor

The sensor is part of the optical path and should be handled like other optical components: **with extreme care**.

Dust can obscure pixels, producing dark patches in the images captured. Dust is most visible when the illumination is collimated. Dark patches caused by dust or dirt shift position as the angle of illumination changes. Dust is normally not visible when the sensor is positioned at the exit port of an integrating sphere, where the illumination is diffuse.

1. The camera should only be cleaned in ESD-safe areas by ESD-trained personnel using wrist straps. Ideally, the sensor should be cleaned in a clean environment. Otherwise, in dusty environments, the sensor will immediately become dirty again after cleaning.
2. Use a high quality, low pressure air duster (e.g. Electrolube EAD400D, pure compressed inert gas, www.electrolube.com) to blow off loose particles. This step alone is usually sufficient to clean the sensor of the most common contaminants.

   Workshop air supply is not appropriate and may cause permanent damage to the sensor.

3. If further cleaning is required, use a suitable lens wiper or Q-Tip moistened with an appropriate cleaning fluid to wipe the sensor surface as described below. Examples of suitable lens cleaning materials are given in Table 14.1. Cleaning materials must be ESD-safe, lint-free and free from particles that may scratch the sensor surface.

   Do not use ordinary cotton buds. These do not fulfil the above requirements and permanent damage to the sensor may result.

4. Wipe the sensor carefully and slowly. First remove coarse particles and dirt from the sensor using Q-Tips soaked in 2-propanol, applying as little pressure as possible. Using a method similar to that used for cleaning optical surfaces, clean the sensor by starting at any corner of the sensor and working towards the opposite corner. Finally, repeat the procedure with methanol to remove streaks. It is imperative that no pressure be applied to the surface of the sensor or to the black globe-top material (if present) surrounding the optically active surface during the cleaning process.

Product		Supplier	Remark
EAD400D	Airduster	Electrolube, UK	www.electrolube.com
Anticon Gold 9"x 9"	Wiper	Milliken, USA	ESD safe and suitable for class 100 environments. www.milliken.com
TX4025	Wiper	Texwipe	www.texwipe.com
Transplex	Swab	Texwipe	
Small Q-Tips SWABS BB-003	Q-tips	Hans J. Michael GmbH, Germany	www.hjm-reinraum.de
Large Q-Tips SWABS CA-003	Q-tips	Hans J. Michael GmbH, Germany	
Point Slim HUBY-340	Q-tips	Hans J. Michael GmbH, Germany	
Methanol	Fluid	Johnson Matthey GmbH, Germany	Semiconductor Grade 99.9% min (Assay), Merck 12,6024, UN1230, slightly flammable and poisonous. www.alfa-chemcat.com
2-Propanol (Iso-Propanol)	Fluid	Johnson Matthey GmbH, Germany	Semiconductor Grade 99.5% min (Assay) Merck 12,5227, UN1219, slightly flammable. www.alfa-chemcat.com

Table 14.1: Recommended materials for sensor cleaning

For cleaning the sensor, Photonfocus recommends the products available from the suppliers as listed in Table 14.1.

Cleaning tools (except chemicals) can be purchased directly from Photonfocus (www.photonfocus.com).

15 Troubleshooting

15.1 No images can be acquired

If no images can be acquired then the cause could be one of the following:

1. Camera is not triggered: see Section 15.1.1

First proceed with the above list in numerical order. If still no images can be acquired go back to step 2. If the problem persists then write an e-mail to Photonfocus support (support@photonfocus.com).

15.1.1 No acquisition due to no triggers

Set the camera to the free-running trigger mode (see Section C.1.1).

If no images can be acquired in free-running mode then triggering is not the main cause of the acquisition problem.

If images can be acquired in free-running mode but not in your chosen trigger mode then check the trigger configuration (see Section C.1.3 and Section C.1.4), or the electrical connection of the trigger signal (see also Section 13.6).

16 Standards Compliance

16.1 Directives and General Standards

The products described in this manual in the form as delivered are in conformity with the provisions of the following European Directives:

- 2014/30/EU Electromagnetic compatibility (EMC)
- 2014/35/EU Low Voltage (LVD)
- 2011/65/EU Restriction of hazardous substances (RoHS)

Conformity to the Directives is assured through the application of the following standards:

Emission:

- EN 61000-6-4:2007/A1:2011: Generic standards – Emission standard for industrial environments
- EN 55032:2015/AC:2016-07: Electromagnetic compatibility of multimedia equipment - Emission requirements – Radio disturbance characteristics, Limits and methods of measurements, class A
- FCC (2010) Part 15: Limit for digital devices, class A

Immunity:

- EN55035:2017: Electromagnetic compatibility of multimedia equipment - Immunity requirements
- EN 61000-6-2:2017: Generic standards –Immunity standard for industrial environments
  - EN 61000-4-2:2009: Electronic discharge immunity tests
  - EN 61000-4-3:2006/A1:2008/A2:2010: Radiated, radio-frequency, electromagnetic field immunity test
  - EN 61000-4-4:2012: Electrical fast transient/burst immunity test
  - EN 61000-4-5:2014: Surge immunity test
  - EN 61000-4-6:2014: Immunity to conducted disturbances, induced by radio-frequency fields

For details consult the EC Declaration of conformity of the specific product. The declarations are available on the Photonfocus website: www.photonfocus.com.

16.2 Country-specific Information

16.2.1 For customers in the USA

This equipment has been tested and found to comply with the limits for a Class A digital device, pursuant to Part 15 of the FCC Rules. These limits are designed to provide reasonable protection against harmful interference when the equipment is operated in a commercial environment. This equipment generates, uses, and can radiate radio frequency energy and, if not installed and used in accordance with the instruction manual, may cause harmful interference to radio communications. Operation of this equipment in a residential area is

likely to cause harmful interference in which case the user will be required to correct the interference at his own expense.

You are cautioned that any changes or modifications not expressly approved in this manual could void your authority to operate this equipment.

The shielded interface cable recommended in this manual must be used with this equipment in order to comply with the limits for a computing device pursuant to Subpart B of Part 15 of FCC Rules.

16.2.2 For customers in Canada

This apparatus complies with the Class A limits for radio noise emissions set out in Radio Interference Regulations.

16.2.3 Pour utilisateurs au Canada

Cet appareil est conforme aux normes Classe A pour bruits radioélectriques, spécifiées dans le Règlement sur le brouillage radioélectrique.

16.3 Life support applications

These products are not designed for use in life support appliances, devices, or systems where malfunction of these products can reasonably be expected to result in personal injury. Photonfocus customers using or selling these products for use in such applications do so at their own risk and agree to fully indemnify Photonfocus for any damages resulting from such improper use or sale.

17 Warranty

The manufacturer alone reserves the right to recognize warranty claims.

17.1 Warranty Terms

The manufacturer warrants to distributor and end customer that for a period of two years from the date of the shipment from manufacturer or distributor to end customer (the "Warranty Period") that:

- the product will substantially conform to the specifications set forth in the applicable documentation published by the manufacturer and accompanying said product, and
- the product shall be free from defects in materials and workmanship under normal use. The distributor shall not make or pass on to any party any warranty or representation on behalf of the manufacturer other than or inconsistent with the above limited warranty set.

17.2 Warranty Claim

The above warranty does not apply to any product that has been modified or altered by any party other than manufacturer, or for any defects caused by any use of the product in a manner for which it was not designed, or by the negligence of any party other than manufacturer.

17.3 Breach of Warranty

To ensure that your warranty remains in force, adhere to the following rules:

1. Do not open the housing or destroy the warranty seal of the camera. Touching internal electronic components of the camera may damage the camera electronic.
2. Do not remove the camera serial number label. If the label is removed and the serial number cannot be read out from the camera registers, the product identification and the product traceability is no longer ensured.
3. Avoid mechanical stress and damage of the camera connectors and the camera housing. Secure the external connectors and cables against unusual force effects.
4. Avoid power supply voltage levels above the camera specifications and reverse voltages.
5. Avoid compensation currents over data cables. Use appropriate ground connections and grounding materials in the installation of your vision system to ensure equal potential of all chassis earth in your system.
6. Avoid electromagnetic fields strengths and electrostatic charging levels which are over the limits of the industrial standards cited in the conformity declaration of the camera.
7. Prevent the camera especially water and moisture ingress. Prevent any liquid, flammable, or metallic substances from entering the camera case.

8. Avoid cleaning the sensor with improper methods. Follow the instructions in the corresponding chapter of this manual.
9. Transport and store the camera in its original packaging only and protect the sensor and the lens mount with a camera body cap.
10. Read the manual carefully before installing and using the camera.

18

Support and Repair

This chapter describes the product support and repair.

18.1 Technical Support

First level technical support is given from the sales department of Photonfocus or your local dealer. In case your issue could not be solved in this way Photonfocus support team takes over. The Photonfocus support team is available via email: support@photonfocus.com. For an efficient handling of your case we need the following information from you:

1. Camera model name,
2. Camera serial number and
3. Detailed description of the issue.

With the camera name and serial number we can determine the exact product status in our production data base. Without these numbers we cannot provide support for your issue. Before mailing the support make sure that your description is based on the latest revision of the camera manual and driver software. The camera manual and the latest driver software can be downloaded from the Photonfocus homepage: www.photonfocus.com. Perform a factory reset to be sure that the issue is not caused by your application settings or application software.

In cases you need sales support contact the Photonfocus sales team via email: <sales@photonfocus.com>.

18.2 Repair and obtaining an RMA Number

Whenever you want to return a camera to Photonfocus contact first the Photonfocus support to be sure that the camera has to be repaired. In a repair case you will get from Photonfocus a Return Material Authorization (RMA) number. The RMA number must be stated in your delivery documents. Please send us together with the RMA a detailed description of the error.

In a warranty case we will repair the camera and return the camera to you with a repair report. In cases without warranty we determine the effort to repair the camera. Before repair we will send you an offer for the repair costs. With your acceptance the camera will be repaired and shipped back to you. The repair will be documented in a repair report.

18.3 Temporal Abandoning and Scrapping

If you want to take the camera temporally out of service close the optical interface with the camera body cap and store the camera in the camera transport package or comparable package. Best practice is to seal the camera in an anti-static plastic bag

If you scrap your vision system or machine be aware that this camera must be disposed of in compliance with the directive 2002/96/EC on waste electrical and electronic equipment (WEEE).

19

References

All referenced documents can be downloaded from our website at www.photonfocus.com.

A

Pinouts

A.1 I/O Connector

The camera has a binder I/O connector, which is shown in Fig. A.1. The pin assignment is given in Table A.2.

It is extremely important that you apply the appropriate voltages to your camera. Incorrect voltages will damage or destroy the camera.

The connection of the input and output signals is described in Section 13.6.

Suitable I/O cables can be ordered from your Photonfocus dealership. Table A.1 indicates the corresponding order number.

Connector Type	Order Nr.
Female cable connector, overmoulded, M5 x 0.5, Series 707 (2m)	704090.061
Female cable connector, overmoulded, M5 x 0.5, Series 707 (5m)	704090.062

Table A.1: I/O cable connector order information (Series 707)

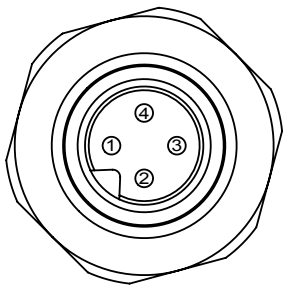

Figure A.1: Schematic of cameras male I/O connector

A.2 GigE Connector

An X-coded M12 connector is used for the GigE interface and power supply of the camera.

Suitable GigE interface cables can be ordered from your Photonfocus dealership.

Pin	*I/O Type*	*Name*	*Description*
1	I	ISO_IN0	Trigger input (opto-isolated)
2	PWR	ISO_GND	I/O GND 0V
3	O	ISO_OUT	Strobe output (opto-isolated)
4	I	ISO_IN1	Trigger input (opto-isolated)

Table A.2: I/O connector pin assignment

B

Camera Timing

B.1 Timed Exposure Mode Camera Timing

Fig. B.1 shows a timing example, when the camera capture frames with rising edges on the camera ISO_IN input. The external signal, which is fed into the cameras ISO_IN input is isolated by an opto-isolator. This signal is delayed by t_{iso-in} before it reaches the FPGA input "Line In". The "Line In" signal is synchronized to the FPGA clock domain and the rising edge is detected. There is a clock uncertainty because of the synchronization logic which is shown by the $t_{input-jitter}$ value. The input pulse can be delayed by the trigger delay feature (see Section 4.6.6) according to the requirement of the application. Finally the exposure time cycle starts after an offset delay $t_{exposure-offset}$.

When the application needs a strobe pulse together with the image acquisition, the internal line in pulse can also be used to start one of the timer. After the timer delay $t_{timer-delay}$ the timer duration $t_{timer-duraton}$ is started which is shown by the timer active signal (see Section 5.2). The timer active signal needs to be selected to output it on "Line Out" (see Section 7.2), which has a fix delay of $t_{lineout-offset}$. The "Line Out" is isolated by an opto-isolator from the camera electronics which leads to an additional delay of $t_{iso-out}$.

The maximum exposure offset value $t_{exposure-offset}$ is up to the read out time of one image row, when a new exposure starts during read out of the previous image. In this case, the start of the exposure is postponed to the start of the next image row read out.

Table B.1 gives an overview of the minimum and maximum values of the timing parameters.

Timing Parameter	Min Value	Max Value
t_{iso-in}	5 μs	18 μs
$t_{input-jitter}$	75 ns	100 ns
$t_{pulse-delay}$	0 s	0.42 s
$t_{expousre-offset}$	178 ns	192 ns [1)] / (time of 1 image row 18 μs) [2)]
$t_{exposure}$	10 μs	0.419 s
$t_{timer-delay}$	0 s	107 s
$t_{timer-duration}$	0 s	107 s
$t_{lineout-offset}$	100 ns	100 ns
$t_{iso-out}$	5 μs???	18 μs???

Table B.1: Camera timing parameter values of the timed exposure mode (Footnotes:[1)] New exposure starts after readout of previous image; [2)] New exposure starts during readout of previous image)

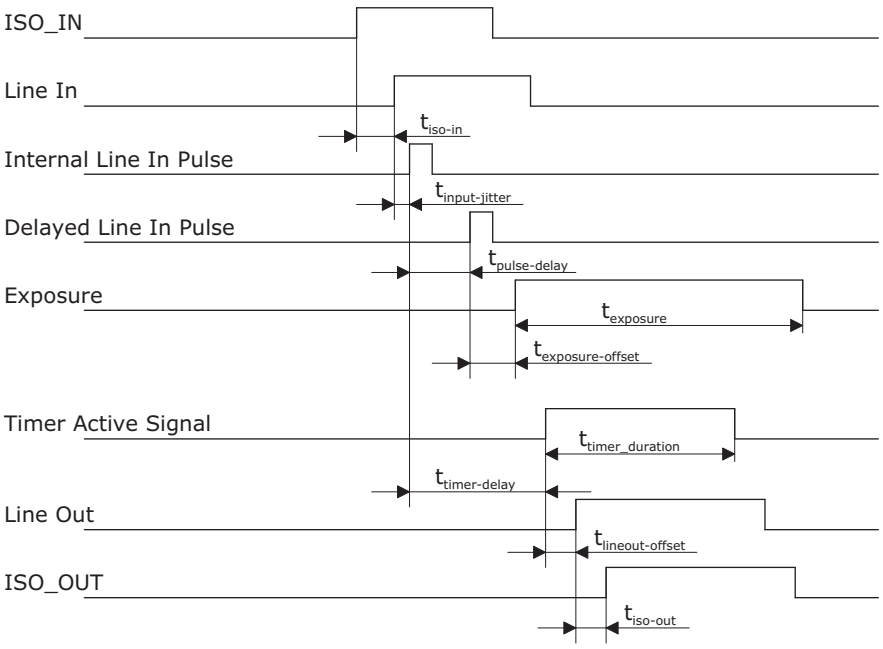

Figure B.1: Timing diagram for the timed exposure mode

C

Use Cases

This chapter shows some typical configurations of the camera. It gives some tips, how to acquire images, how to use the general purpose counters and timers and how to configure the look up table.

C.1 Acquisition

This section shows some configuration procedures of frequently used acquisition situations.

C.1.1 Camera runs in "free-running" mode

The camera needs to start acquiring images as fast as possible as soon as the command `AcquisitionStart()` has been performed. The following configuration procedure must be applied:

1. The `TriggerMode` of the `AcquisitionStart`-, `FrameStart`-, `FrameBurstStart`- and `ExposureStart`-trigger must be set to `Off`.
2. Parameter `EnAcquisitionFrameRate` must be set to `False`.
3. The required image `Width` and `Height` must be set.
4. The required `PixelFormat` must be set.
5. `AcquisitionMode` must be set to `Continuous`.
6. The software command `AcquisitionStart()` must be applied.

C.1.2 Camera runs in "constant frame rate" mode

In some application it is necessary, that the camera acquires image at a certain frame rate. This mode is similar to the "free-running" mode, however a required frame rate can be configured additionally. The following configuration procedure shows how to set the camera in the constant frame rate mode:

1. The `TriggerMode` of the `AcquisitionStart`, `FrameStart`, `FrameBurstStart`- and `ExposureStart` trigger must be set to `Off`.
2. Parameter `EnAcquisitionFrameRate` must be set to `True`.
3. Either the `AcquisitionFrameTime` or `AcquisitionFrameRate` must be set accordingly.
4. The required image `Width` and `Height` must be set.
5. The required `PixelFormat` must be set.
6. `AcquisitionMode` must be set to `Continuous`
7. The software command `AcquisitionStart()` must be applied.

The "constant frame rate" mode provides two different acquistion frame rate settings: ExposureControlled and FrameRateControlled:

- In ExposureControlled acquisition mode the maximal configurable frame rate at a given ROI settings is limited by the exposure time. When the user increases the exposure time, the camera decreases the frame rate automatically if necessary.

- In FrameRateControlled acquisition mode the max configurable exposure time depends on the configured frame rate. When the user increases the frame rate, the camera decreases the exposure time automatically if necessary.

C.1.3 Camera runs in triggered mode

The camera can be triggered by a software or hardware signal. In this mode, a frame is started on every generated trigger signal. The following configuration procedure shows how to set the camera in triggered mode:

1. The `TriggerMode` of `FrameStart` trigger must be set to `On`. The `AcquisitionStart`, `FrameBurstStart` and the `ExposureStart` must be set to `Off`.
2. The `TriggerSource` of the `FrameStart` trigger must be set to the corresponding source. For instances to `Line0`.
3. Since the source is set to `Line0`, the `TriggerActivation` must be set accordingly: `RisingEdge`, `FallingEdge` or `AnyEdge`.
4. `TriggerDelay` and `TriggerDivider` of the `FrameStart` trigger must be set accordingly.
5. The required image `Width` and `Height` must be set.
6. The required `PixelFormat` must be set.
7. `AcquisitionMode` must be set to `Continuous`.
8. The software command `AcquisitionStart()` must be applied.

After these configurations, the camera is waiting for the corresponding signal edge of the selected trigger source, in this case `Line0`.

It might be necessary to adjust the polarity of the `Line0` input signal. This can be done by the parameter `LineInvert` in the section DigitalIOControl.

If the camera must be triggered by a software signal, there are two ways, how this can be done:

- Set the `TriggerSource` of the `FrameStart` trigger to `Software`. A frame is started, when the `TriggerSoftware()` command of the `FrameStart` trigger is applied.
- Set the `TriggerSource` of the `FrameStart` trigger to one of the eight software signals; for instances `SoftwareSignal0`. A frame is started, when the command `TriggerSignalPulse()` in the section SoftwareSignalControl is applied (SoftwareSignalSelector must be set to `SoftwareSignal0`).

C.1.4 Camera runs in burst triggered mode

If a certain number of images must be acquired on a single trigger input event, the cameras frame burst start trigger feature can be used. The following configuration procedure shows how to set the camera in burst triggered mode:

1. The `TriggerMode` of `FrameBurstStart` trigger must be set to `On`. The `AcquisitionStart`, `FrameStart` and the `ExposureStart` trigger must be set to `Off`.
2. The `TriggerSource` of the `FrameBurstStart` trigger must be set to the corresponding source. For instances to `Line0`.
3. Since the source is set to `Line0`, the `TriggerActivation` must be set accordingly: `RisingEdge`, `FallingEdge` or `AnyEdge`.
4. `TriggerDelay` and `TriggerDivider` of the `FrameBurstStart` trigger must be set accordingly.

5. The number of frame within a burst must be set by parameter `AcquisitionBurstFrameCount` parameter.
6. Set the parameter `EnAcquisitionFrameRate` to `False` if the frames within a burst must be acquired as fast as possible.
7. If the frames within a burst must be acquired with a certain speed, set the parameter `EnAcquisitionFrameRate` to `True` and configure either `AcquisitionFrameTime` or `AcquisitionFrameRate` accordingly.
8. The required image `Width` and `Height` must be set.
9. The required `PixelFormat` must be set.
10. `AcquisitionMode` must be set to `Continuous`.
11. The software command `AcquisitionStart()` must be applied.

It might be necessary to adjust the polarity of the `Line0` input signal. This can be done by the parameter `LineInvert` in the section DigitalIOControl.

C.1.5 Triggered controlled exposure mode

The exposure time can be controlled by an externally applied trigger signal on LineIn input. The following configuration procedure shows how to set the camera in the triggered controlled exposure mode:

1. Parameter `ExposureMode` must be set to `TriggerControlled`.
2. The TriggerMode of `ExposureStart` and `ExposureEnd` trigger must be set to `On`. The `AcquisitionStart`, `FrameStart` and `FrameBurstStart` trigger must be set to `Off`.
3. The `TriggerSource` of the `ExposureStart` trigger must be set to `Line0`.
4. The `TriggerActivation` of the `ExposureStart` trigger must be set to `RisingEdge`.
5. The `TriggerSource` of the `ExposureEnd` trigger must be set to `Line0`.
6. The TriggerActivation of the `ExposureEnd` trigger must be set to `FallingEdge`.
7. `TriggerDelay` and `TriggerDivider` of the `ExposureStart` and `ExposureEnd` trigger must be set accordingly.
8. The required image `Width` and `Height` must be set.
9. The required `PixelFormat` must be set.
10. `AcquisitionMode` must be set to `Continuous`.
11. The software command `AcquisitionStart()` must be applied.

C.2 Timer

There are four general purpose timers available. The following sections show some use cases, how the timers can be used.

C.2.1 Strobe Signal Output

The timer can be used to generate a pulse with a certain width on the LineOut output together with every exposure cycle in order to control an external light. The following procedure shows, how to configure one of the timer for this purposes:

1. Select one of the four available timers by setting of the `TimerSelector` to `Timer0`, `Timer1`, `Timer2` or `Timer3`.
2. Select the timer trigger source. Set `TimerTriggerSource` to `ExposureStart`.
3. Parameter `TimerTriggerActivation` can be ignored. This configuration is only necessary, when `Line0` input is selected as a trigger source.
4. Configure the necessary `TimerDuration` value and the `TimerDelay` value.

At this stage, the configured timer generates a pulse of a certain width and after a certain delay every time, when a new exposure cycle starts, which is indicated by the internally available `TimerActive` status. This signal must be connected to the camera LineOut output, which can be done in the DigitalIOControl section:

1. Set the `LineSelector` to `LineOut0`.
2. Set the `LineSource` of this output to the corresponding timer acitve signal: `Timer0Active`, `Timer1Active`, `Timer2Active` or `Timer3Active`.
3. Set the polarity of this output accordingly with the parameter `LineInverter`.

C.3 Counter

There are four general purpose counters available, which can be used to count any events in the camera. The following sections show some use cases, how the counters can be used. There are some examples of simple counter configurations as well as some more sophisticated settings.

C.3.1 Counter Reset

A counter needs to be reset in order to be activated after configuration. This can be done by the software reset command `CounterReset` or by an external reset source, which can be selected by the parameter `CounterResetSource` of the corresponding counter. Furthermore for each counter there is an automatically counter reset at acquisition start feature available: `CounterAcquisitionStartReset`. If it is set to `True`, the corresponding counter is reset when an acquisition start command is applied. Depending on the application, it might be necessary, that the current counter value must not be reset at acquisition start. In this case the parameter `CounterAcquisitionStartReset` must be set to `False` for the corresponding counter and the user must execute the parameter `CounterReset` manually for a first counter start.

C.3.2 Image Counter

Any of the four available counters can be used as an image counter. The following configuration procedure must be applied:

1. Select one of the four available counters by setting of the `CounterSelector` to `Counter0`, `Counter1`, `Counter2` or `Counter3`.
2. Select the corresponding counter event source by the parameter `CounterEventSource`. Any signal source, which is generated with every frame, can be select. For instances `FrameStart` or `ExposureStart` can be selected.
3. Parameter `TimerTriggerActivation` can be ignored. This configuration is only necessary, when `Line0` input is selected as a trigger source.
4. All other counter parameter must be left in default state (Both the `CounterResetSource` and `CounterTriggerSource` must be set to `Off`).
5. The counter needs to be reset (see C.3.1).

C.3.3 Real Time Counter

Any of the four available counters can be used as a real time counter. The following configuration procedure must be applied:

1. Select one of the four available counters by setting of the `CounterSelector` to `Counter0`, `Counter1`, `Counter2` or `Counter3`.
2. Set the parameter `CounterEventSource` to `TimeStampTick`.
3. Parameter `TimerTriggerActivation` can be ignored. This configuration is only necessary, when `Line0` input is selected as a trigger source.
4. Configure the time stamp tick value `CounterTimeStampTickValue`. For instances a value of 1 μs generates an event every 1 μs.
5. All other counter parameter must be left in default state (Both the `CounterResetSource` and `CounterTriggerSource` must be set to `Off`).
6. The counter needs to be reset (see C.3.1).

C.3.4 Missed Trigger Counter

For monitoring purposes it might be necessary to detect an overtriggering condition. It means, that not all applied triggers can be processed by the camera. This can be done by setting up of a missed trigger counter. Any of the four available counters can be used as a missed trigger counter. The following configuration procedure must be applied:

1. Select one of the four available counters by setting of the `CounterSelector` to `Counter0`, `Counter1`, `Counter2` or `Counter3`.
2. Set the corresponding `CounterEventSource` to `MissedAcqStartTrigger`, `MissedFrameStartTrigger`, `MissedFrameBurstStartTrigger`, `MissedExposureStartTrigger` or `MissedTrigger`.
3. Parameter `TimerTriggerActivation` can be ignored. This configuration is only necessary, when `Line0` input is selected as a trigger source.
4. All other counter parameter must be left in default state (Both the `CounterResetSource` and `CounterTriggerSource` must be set to `Off`).
5. The counter needs to be reset (see C.3.1).

D

Document Revision History

Revision	Date	Change
1.0	September 2019	First version