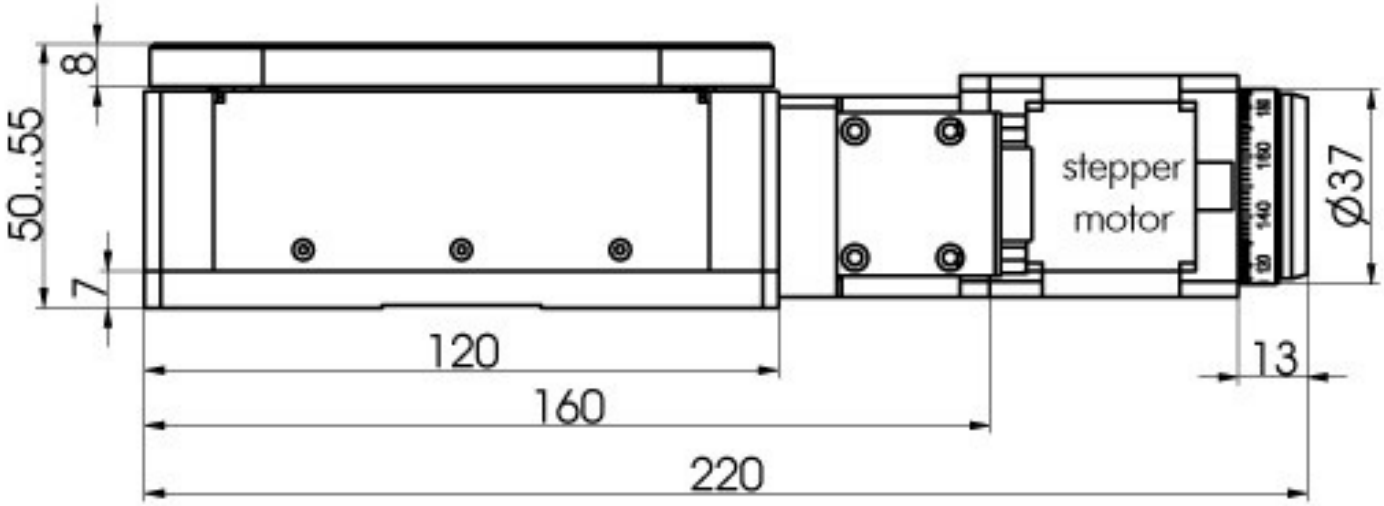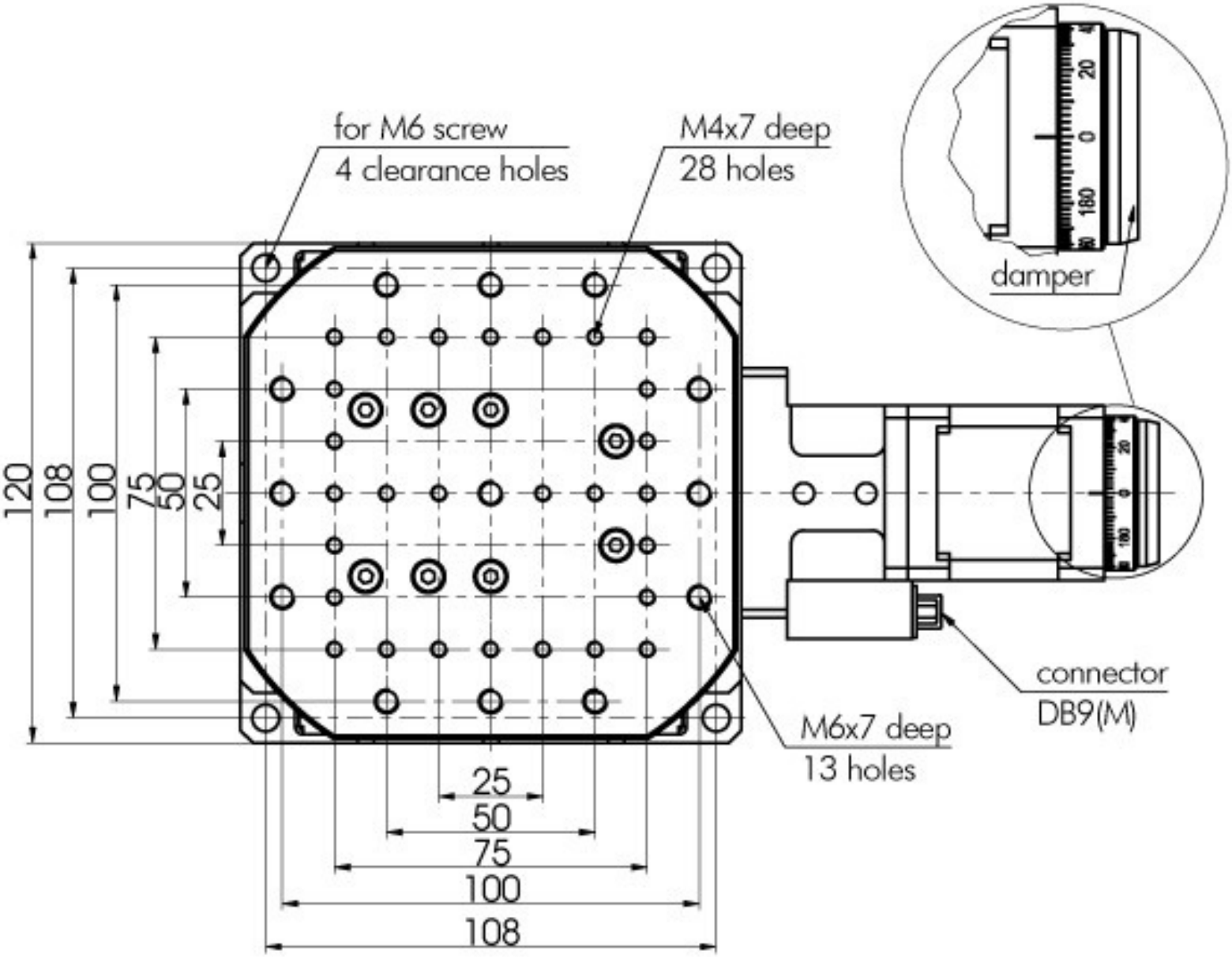Motorized Vertical Lift Stage *8MVT120-5-4247*